PRODOTTO/PRODUCT: Pannello di comando BERTY CONTROL / Sprayer control BERTY CONTROL

Table: **1**

82.8225.97.3 (VG / VS)
82.8034.97.3 (VG + 2 VS)
82.8070.97.3 (2 VS)

82.8069.97.3 (VG + VV)
82.8035.97.3 (VG + VV + 2 VS)
82.8036.97.3 (VG + VV + 3 VS)

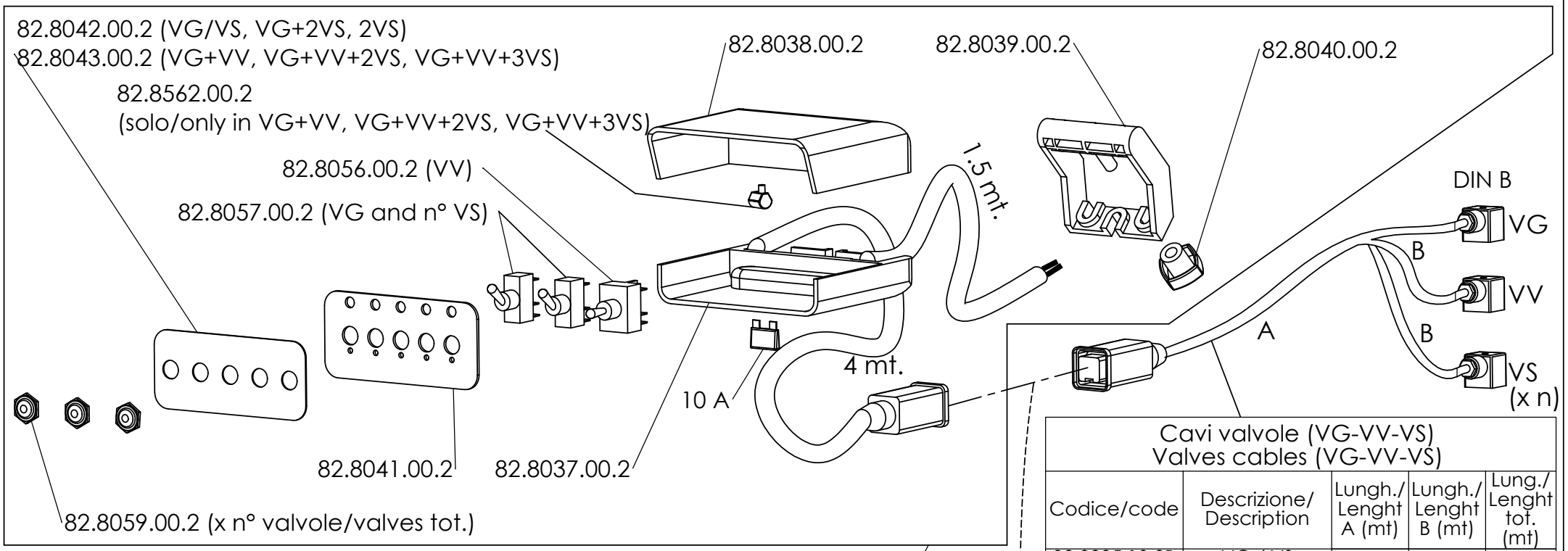

Cavi valvole (VG-VV-VS) Valves cables (VG-VV-VS)				
Codice/code	Descrizione/ Description	Lungh./ Lenght A (mt)	Lungh./ Lenght B (mt)	Lung./ Lenght tot. (mt)
82.8225.10.2B	VG / VS	3	1	4
82.8034.10.2B	VG + 2VS			
82.8070.10.2B	2VS			
82.8069.10.2B	VG + VV			
82.8035.10.2B	VG + VV + 2 VS			
82.8036.10.2B	VG + VV + 3 VS			

82.8225.00.2 (VG / VS)
82.8034.00.2 (VG + 2 VS)
82.8070.00.2 (2 VS)

82.8069.00.2 (VG + VV)
82.8035.00.2 (VG + VV + 2 VS)
82.8036.00.2 (VG + VV + 3 VS)

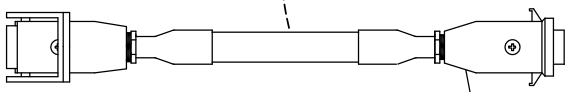

82.8065.10.2 (3 mt.) (optional cavo di estensione/extension cable)
(VG + VV + 3 VS max)

BERTOLINI pumps

Data/Date: 07/12/2025 Rev.:00 Note: