CW - HW 1320-1520-1820-2120-2420

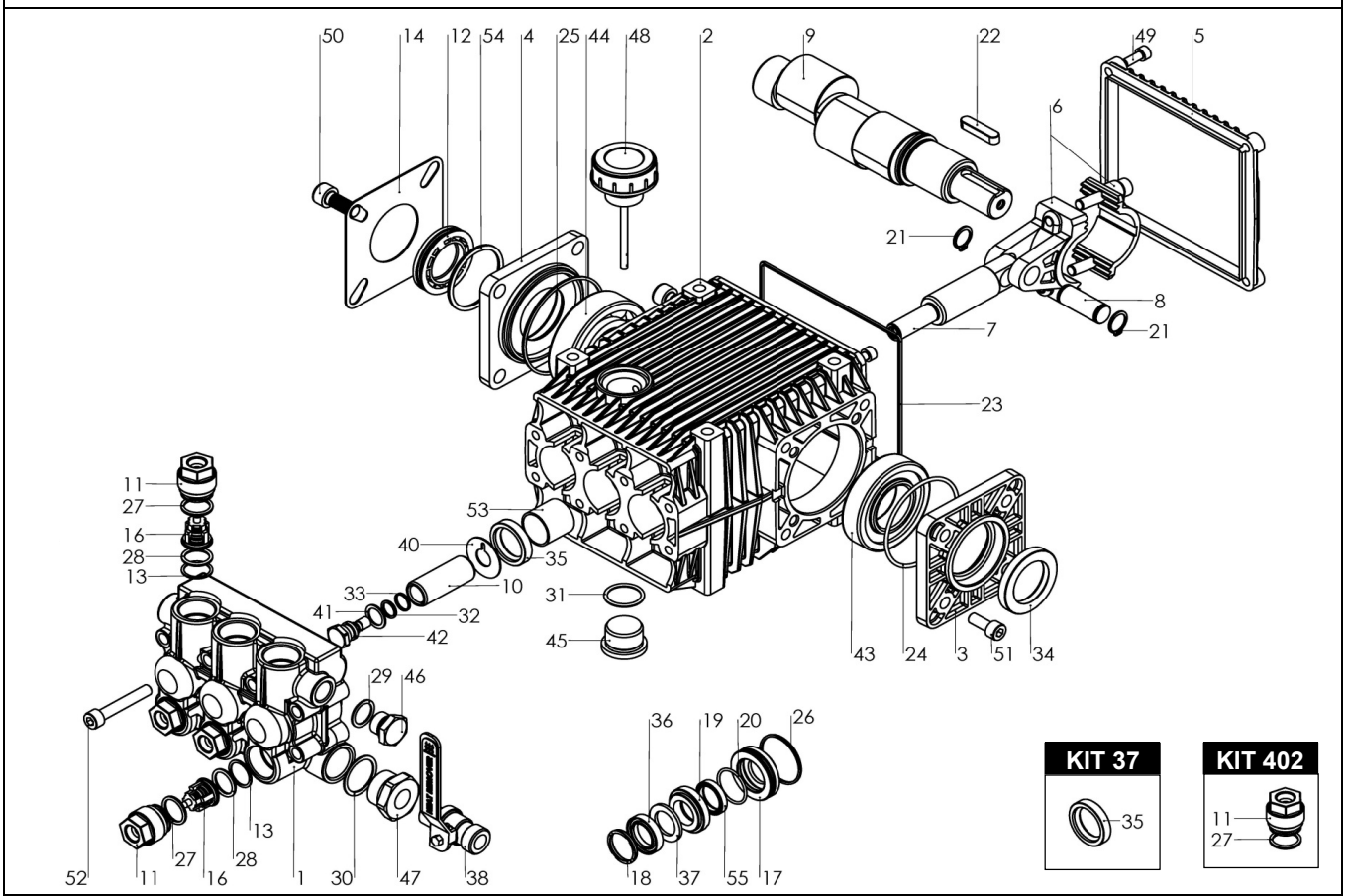

KIT 407

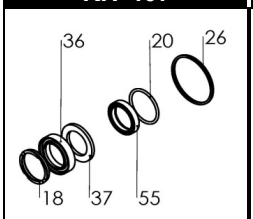

KIT 408

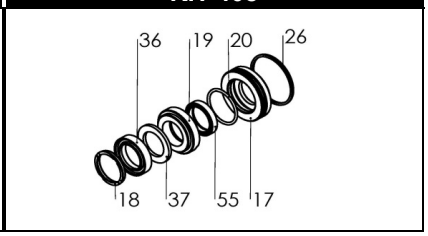

KIT 249

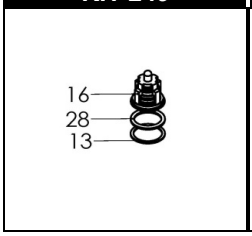

KIT 127

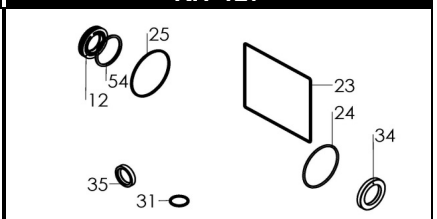

POS.	CODICE PART NO. RÉF.	DENOMINAZIONE - DESCRIPTION - DESCRIPTION	Q.TY
1	060276282	PUMP HEAD NICKEL PLATED	1
2	060001092	CRANKCASE	1
3	060016092	BEARING COVER	1
4	060017092	BEARING COVER	1
5	060003092	CRANKCASE COVER	1
6	069800972	CONNECTING ROD	3
6	862796002	CONNECTING ROD BOLT	6
7	060071512	PLUNGER ROD	3
8	060007492	PISTON PIN	3
9/1	060106262	CRANKSHAFT CW 1320	1
9/2	060107262	CRANKSHAFT CW 1520	1
9/3	060163262	CRANKSHAFT CW 1820	1
9/4	060109262	CRANKSHAFT CW 2120	1
9/5	060165262	CRANKSHAFT CW 2420	1
10	060009182	CERAMIC PISTON	3
11-kit 402	070043282	VALVE CAP NICKEL PLATED	6
12-kit 127	060019322	OIL SIGHT GLASS	1
13-kit 249	040480542	ANTI-EXTRUSION RING	6
14	060123612	OIL SIGHT LOCKING COVER	1
16-kit 249	069959973	CHECK VALVES HW	6
17-kit 408	060278532	REAR GLAND NICKEL PLATED	3
18-kit 407-408	802066102	THRUST RING	3
19-kit 408	060277532	FRONT GLAND NICKEL PLATED	3
20-kit 407-408	803075502	O-RING VITON	3
21	801099002	CIRCLIP	6
22	806534002	TAB	1
23-kit 127	803210902	O-RING	1
24-kit 127	803210552	O-RING	1
25-kit 127	803210642	O-RING	1
26-kit 407-408	803080152	O-RING VITON	3
27-kit 402	803182102	O-RING VITON	6
28-kit 249	803095502	O-RING VITON	6
29	824109002	GASKET	1
30	824180002	GASKET	1
31-kit 127	803204802	O-RING	1
32	803058502	O-RING VITON	3

POS.	CODICE PART NO. RÉF.	DENOMINAZIONE - DESCRIPTION - DESCRIPTION	Q.TY
33	803902002	ANTI-EXTRUSION RING	3
34-kit 127	802143002	OIL SEAL	1
35-kit 37-127	802090002	OIL SEAL	3
36-kit 407-408	802066002	HP SEAL HOT WATER	3
37-kit 407-408	802066202	ANTIEXTRUSION RING	3
38	845549002	LEFT TAP HEAT REMOVER	1
40	060018682	WASHER	3
41	843646002	WASHER	3
42	060072002	PISTON BOLT	3
43	812848002	ROLLER BEARING	1
44	812867002	BALL BEARING	1
45	852687002	CAP G 3/4	1
46	852579532N	PLUG G 3/8 NICKEL PLATED	1
47	852717532	PLUG G.3/4-G.3/8	1
48	060020322	OIL FILLER PLUG	1
49	862108002	SCREW	4
50	863265002	SCREW	4
51	862562002	SCREW	4
52	862945002	SCREW	8
53	804300002	BUSHING	3
54-kit 127	803262002	O-RING	1
55-kit 311-408	802066502	LP SEAL HOT WATER	3

REPAIR KIT	ITEM NO,s	INCLUDED	PCS.
kit 37	069814973	SPARE PARTS KIT	3
kit 402	079890973	SPARE PARTS KIT	12
kit 407	069987973	SPARE PARTS KIT	18
kit 408	069988973	SPARE PARTS KIT	24
kit 249	069956973	SPARE PARTS KIT	18
kit 127	069872973	SPARE PARTS KIT	10

BERTOLINI pumps