TML 2120 - 2420 - HW

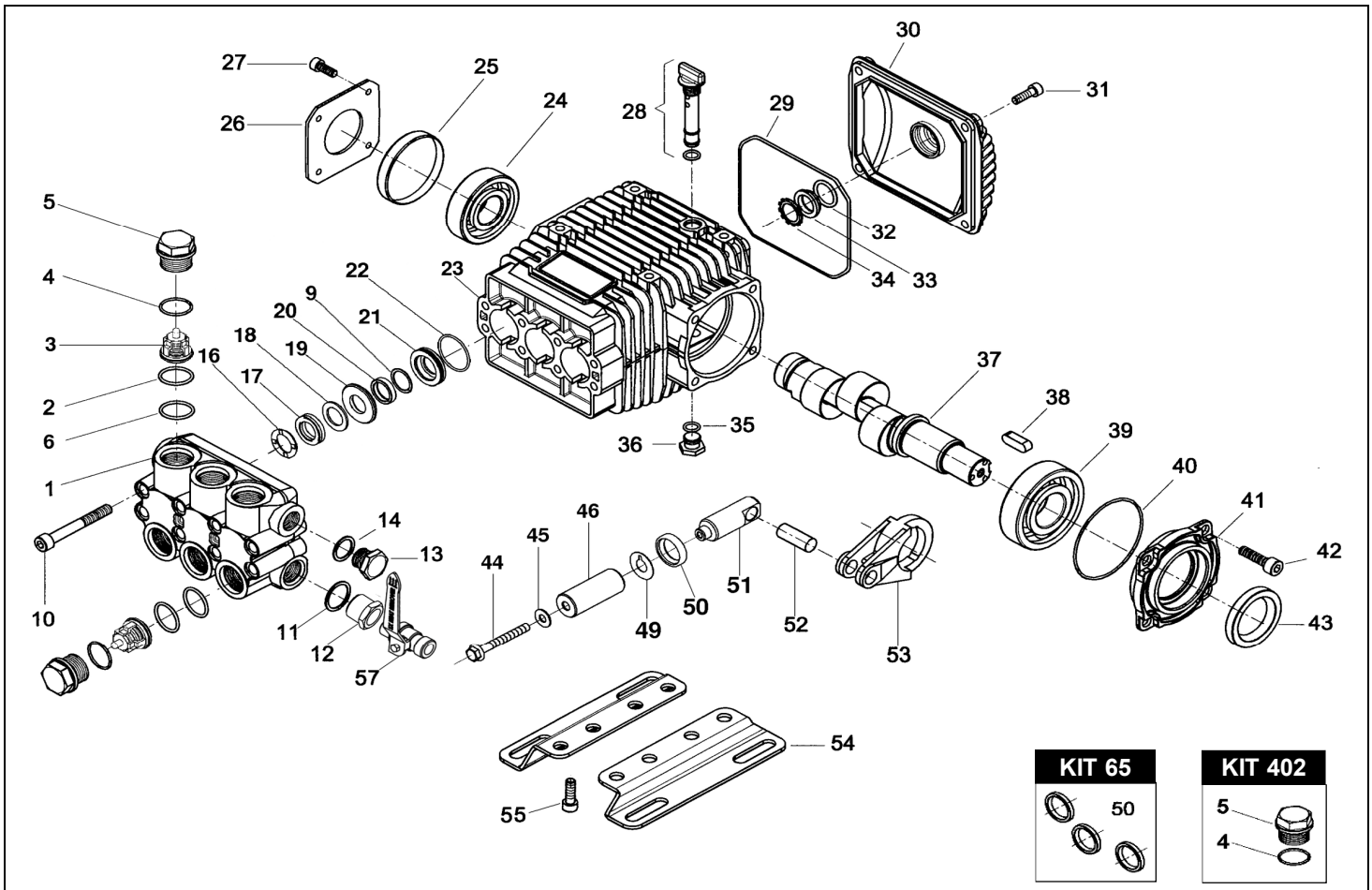

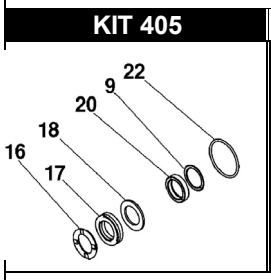

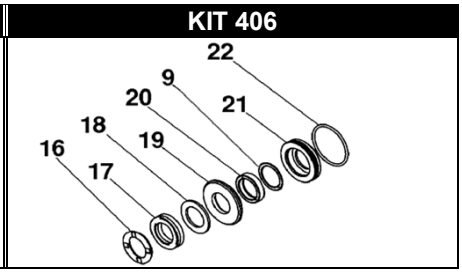

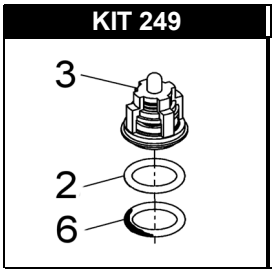

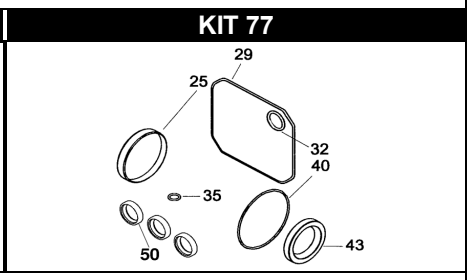

POS.	CODICE PART NO. RÉF.	DENOMINAZIONE - DESCRIPTION - DESCRIPTION	Q.TY
1	070219282	PUMP HEAD NICKEL PLATED	1
2-kit 249	803095502	O-RING VITON	6
3-kit 249	069959973	CHECK VALVES	6
4-kit 402	803182502	O-RING VITON	6
5-kit 402	070043532	VALVE CAP NICKEL PLATED	6
6-kit 249	040480542	ANTI EXTRUSION RING	6
9-kit 406-405	803075502	O-RING VITON	3
10	862985002	SCREW	8
11	824140002	GASKET	1
12	835033002	NIPPLE G.1/2-G.3/8	1
13	852579532N	PLUG G 3/8 NICKL PLATED	1
14	824109002	GASKET	1
16-kit 406-405	802066102	SEAL PACKER	3
17-kit 406-405	802066002	PACKING U 20X30	3
18-kit 406-405	802066202	EXTERNAL CHECK RING	3
19-kit 406	070220532	FRONT GLAND NICKEL PLATED	3
20-kit 406-405	802066502	PACKING 20X26 (PTFE)	3
21-kit 406	070221532	REAR GLAND NICKEL PLATED	3
22-kit 406-405	803080052	O-RING VITON	3
23	070001092	CRANKCASE	1
24	812730102	ROLLER BEARING	1
25-kit 77	802102002	COVER	1
26	050045612	CRANKCASE COVER	1
27	862108002	SCREW	4
28	049832973	FILLER PLUG	1
29-kit 77	803210682	O-RING	1
30	040117092	REAR COVER	1

POS.	CODICE PART NO. RÉF.	DENOMINAZIONE - DESCRIPTION - DESCRIPTION	PCS.
31	862168002	SCREW	4
32-kit 77	803189002	O-RING	1
33	040120322	OIL SIGHT GLASS	1
34	801184002	SNAP RING	1
35-kit 77	803057002	O-RING	1
36	852543502	CAP G.1/4	1
37/1	070037262	CRANKSHAFT TML 2120 HW	1
37/2	070038262	CRANKSHAFT TML 2420 HW	1
38	806534002	TAB	1
39	812776202	ROLLER BEARING	1
40-kit 77	803080702	O-RING	1
41	070011092	SUPPORT	1
42	862683002	SCREW	4
43-kit 77	802119002	OIL SEAL	1
44	862401002	SCREW	3
45	843620052	WASHER	3
46	080070182	CERAMIC PISTON	3
49	843826002	WASHER	3
50-kit 65-77	802063502	OIL SEAL	3
51	070152512	PLUNGER ROD	3
52	852006282	PISTON PIN	3
53	070005112	CONROD	3
54-optional	040247612	MOUNTING RAIL	2
55-optional	862495002	SCREW	4
56-optional	079802973	MOUTING RAIL KIT	1
57	845549002	LEFT TAP HR	1

REPAIR KIT	ITEM NO,s INCLUDED		PCS.
kit 65	049837973	SPARE PARTS KIT	3
kit 402	079890973	SPARE PARTS KIT	12
kit 77	079808973	SPARE PARTS KIT	9
kit 249	069956973	SPARE PARTS KIT	18
kit 406	079895973	SPARE PARTS KIT	24
kit 405	079894973	SPARE PARTS KIT	18