CAX 2475

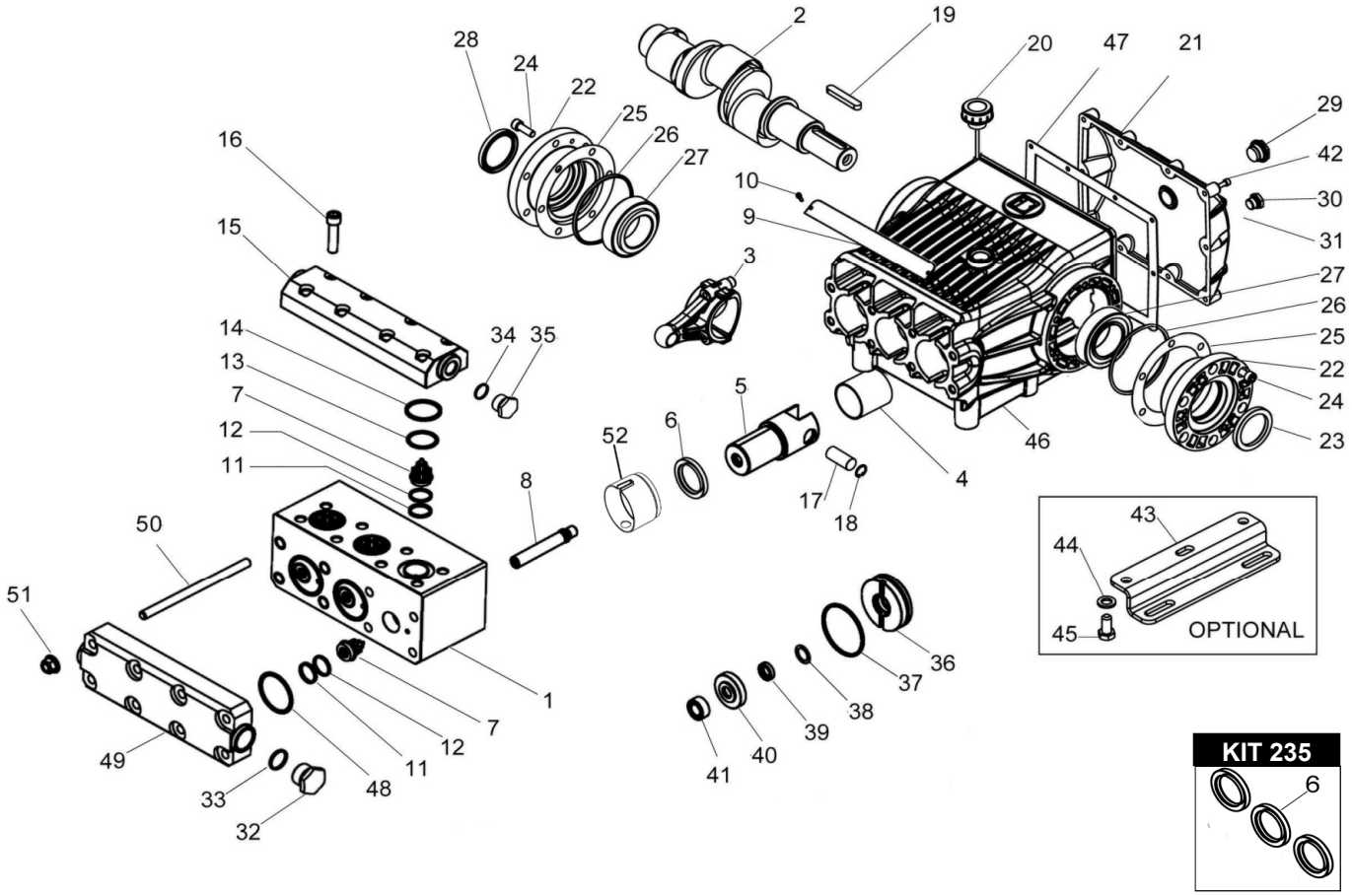

KIT 266

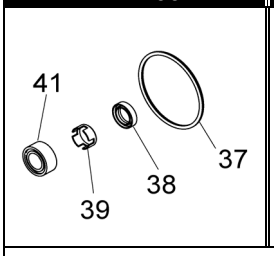

KIT 267

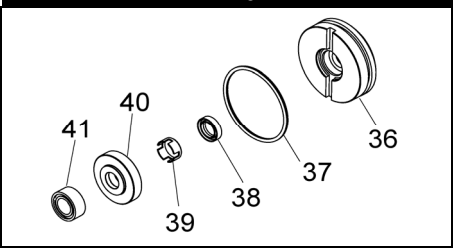

KIT 263

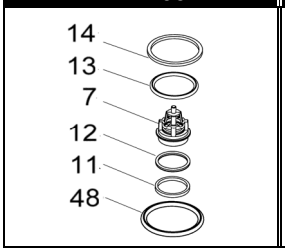

KIT 236

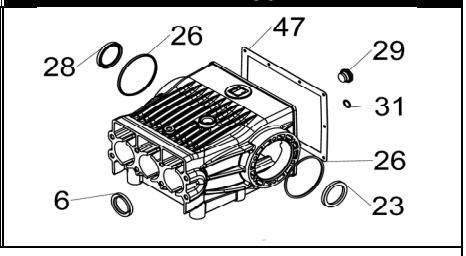

POS.	CODICE PART NO. RÉF.	DENOMINAZIONE - DESCRIPTION - *DESCRIPTION*	Q.TY
1	740126542	PUMP HEAD	1
2	740005262	PUMP SHAFT (before 09/2014)	1
2	740070262	PUMP SHAFT (from 09/2014)	1
3	740003112	CONNECTING ROD (before 09/2014)	3
3	740086112	CONNECTING ROD (from 09/2014)	3
4	804466002	BUSH DIA.50x55x60	3
5	740125512	PLUNGER ROD	3
6-kit. 235-236	802194002	OIL SEAL DIA.45X65X8	3
7-kit. 263	740103973	VALVE ASSEMBLY	6
8	740130512	PISTON DIA.16	3
9	740116542	INSPECTION PANEL	1
10	861841502	SCREW M4X12 UNI 5931	2
11-kit. 263	740109542	ANTI EXTRUSION RING	6
12-kit. 263	803204002	O-RING DIA.2,62X23,81	6
13-kit. 263	803253002	OR-RING DIA.3,53x34,52	3
14-kit. 263	740113542	ANTI EXTRUSION RING	3
15	740102542	OUTLET COLLECTOR	1
16	863985102	BOLT M12X50 UNI 5931	8
17	740008492	PISTON PIN	3
18	800009002	SNAP RING DIA.20	6
19	806587002	TAB 12x8x70	1
20	853539002	OIL FILLER PLUG	1
21	740002082	BACK COVER	1
22	740022082	BEARING SUPPORT	2
23-kit. 236	802251002	OIL SEAL DIA.55X72X8	1
24	863300002	BOLT M10X30 UNI 5931	12
25	740050652	SHIM 0,1 mm	1
25	740051652	SHIM 0,2 mm	2
26-kit. 236	803291102	O-RING DIA.3,53X107,5	2
27	812860002	BEARING 33111	2
28-kit. 236	802099702	CAP DIA.72X8	1

POS.	CODICE PART NO. RÉF.	DENOMINAZIONE - DESCRIPTION - *DESCRIPTION*	Q.TY
29-kit. 236	853515502	OLI SIGHT GLASS	1
30	852579002	PLUG. G 3/8"	1
31-kit. 236	824107002	GASKET	1
32	852712532	PLUG G 1"	1
33	824230002	GASKET	1
34	824140002	GASKET	1
35	852629702	PLUG G.1/2"	1
36-kit. 267	740128532	BACK GLAND	3
37-kit. 266-267	803284002	O-RING DIA.3,53X68,6	3
38-kit. 266-267	802042002	"U" PACKING DIA.16X24	3
39-kit. 266-267	740131532	THRUST RING	3
40-kit. 267	740127532	FRONT GLAND	3
41-kit. 266-267	802042102	"U" PACKING DIA.16X29	3
42	862261002	BOLT M6X30 UNI 5931	10
43	740030612	MOUNTING RAIL (OPT.)	2
44	844006002	WASHER DIA.16X27X3,5 (OPT.)	6
45	864140002	BOLT M14X30 UNI 5737 (OPT.)	6
46	740104082	CRANKCASE	1
47-kit. 236	740049722	GASKET	1
48-kit. 263	803278002	O-RING DIA.3,53X55,56	3
49	740101542	INLET COLLECTOR	1
50	740114542	TIE BOLT M12	8
51	814707002	NUT M12 UNI 6927	8
52	740088322	OIL SEAL SPACER (FROM 09/13)	3

REPAIR KIT		ITEM NO,s INCLUDED	PCS.
KIT 266	745013973	SPARE PARTS KIT	12
KIT267	745014973	SPARE PARTS KIT	18
KIT 263	745010973	SPARE PARTS KIT	27
KIT 235	745006973	SPARE PARTS KIT	3
KIT 236	745007973	SPARE PARTS KIT	11