CHX 24-1000

PARTE IDRAULICA - HYDRAULIC PART

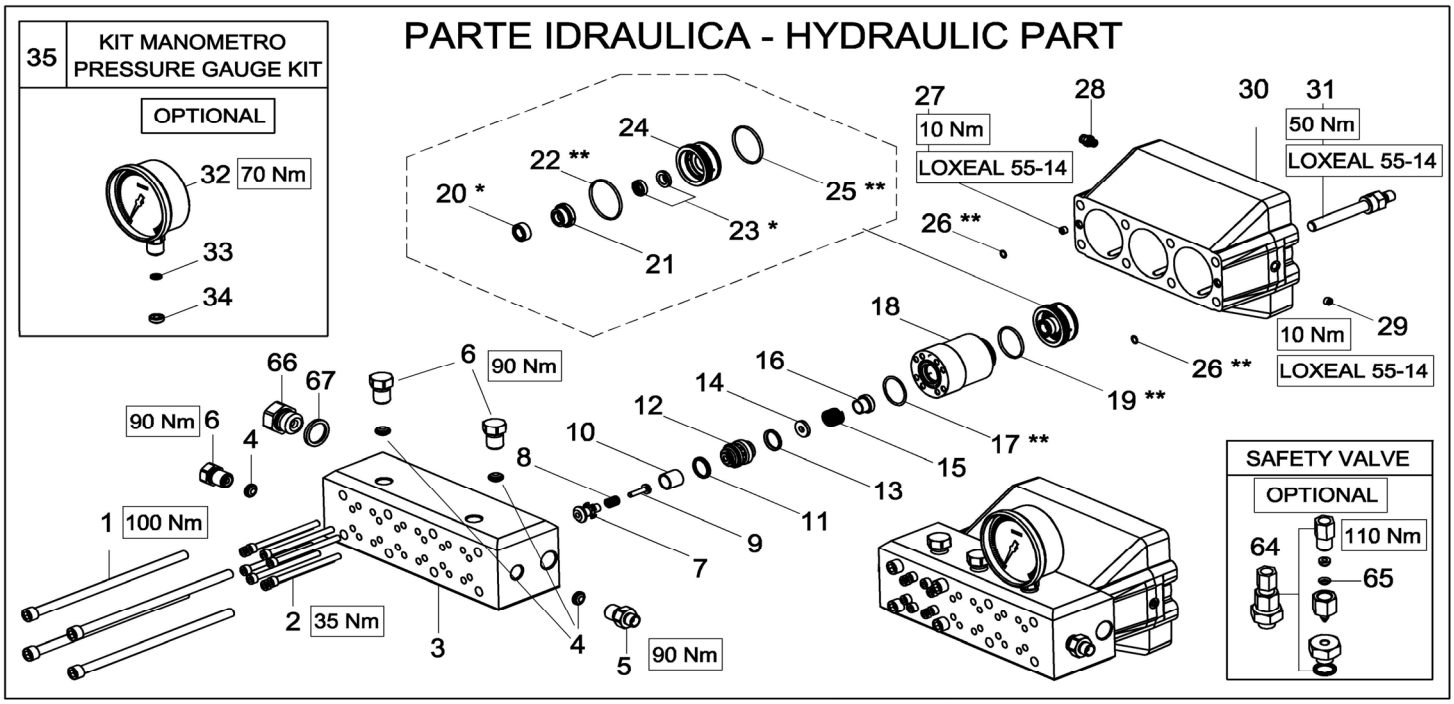

PARTE MECCANICA - MECHANICAL PART

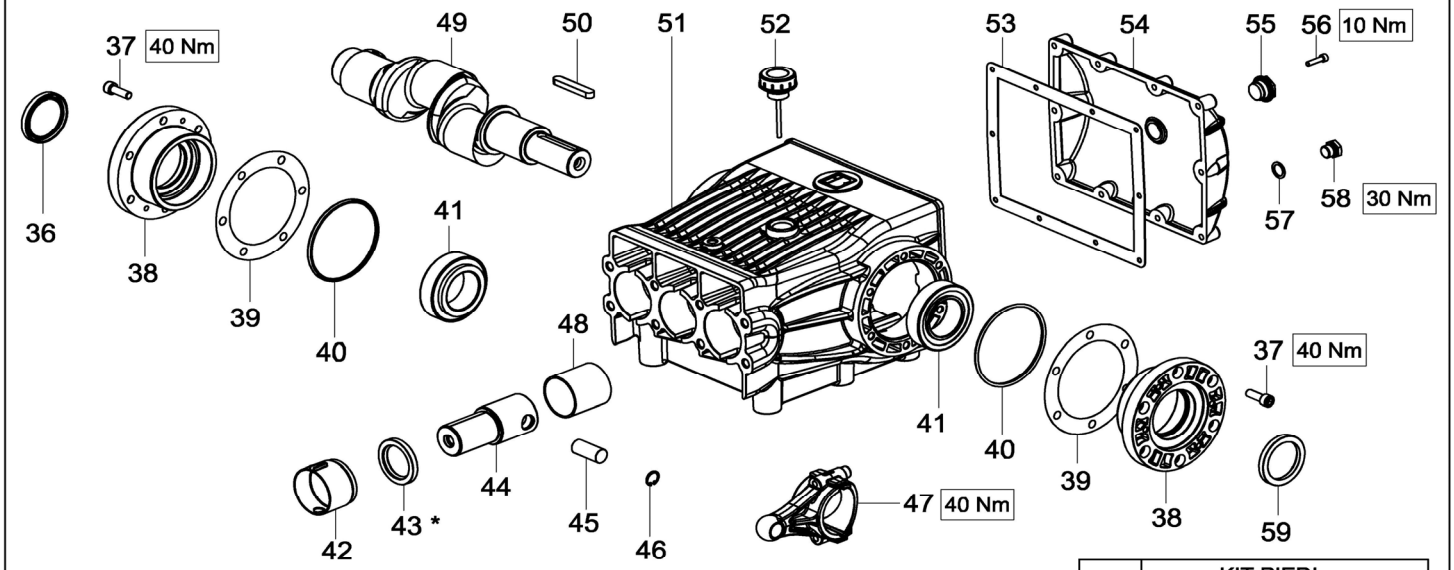

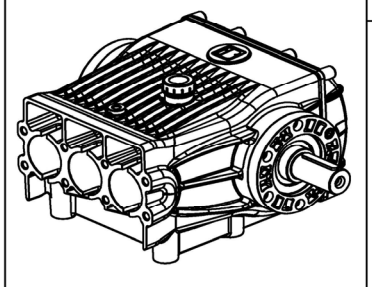

KIT 235

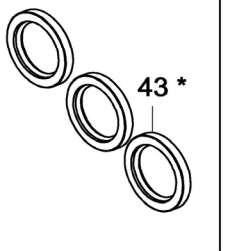

KIT 339

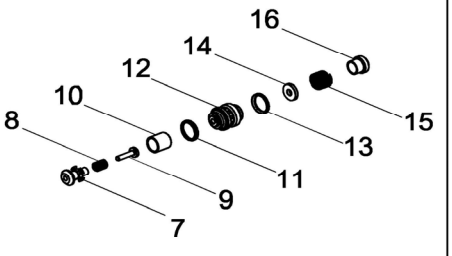

63 KIT PIEDI MOUNTING RAILS KIT

OPTIONAL

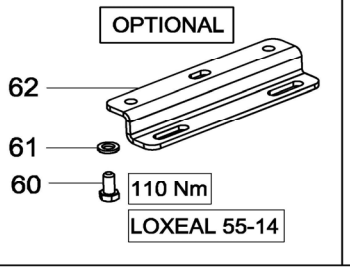

KIT 357

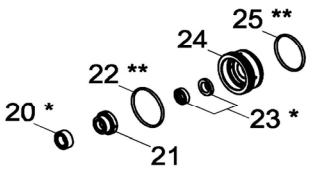

KIT 358

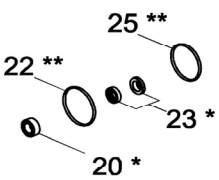

KIT 342

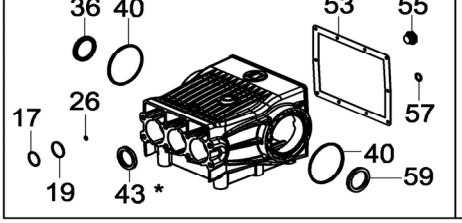

CHX 24-1000

POS.	CODICE *PART NO. REF.*	**DENOMINAZIONE** - DESCRIPTION - *DESCRIPTION*	Q.TY
1	864139502	BOLT M12X260 UNI 5931 12.9	8
2	863080102	BOLT M8X110 UNI 5931 12.9	24
3	740156542	PUMP HEAD	1
4	835101002	HIGH PRESSURE CONIC PAD	4
5	835051602	NIPPLE G.1/2" HP-G.3/8" 60° (before 03/17)	2
5	835051702	NIPPLE G.1/2" HP-G.1/4" 24° (from 03/17)	2
6	858629802	PLUG G.1/2" HP	1
7-KIT 339	740157522	VALVE GUIDE	3
8-KIT 339	740172512	VALVE SPRING-OUTLET SIDE	3
9-KIT 339	740170512	VALVE POPPET-OUTLET SIDE	3
10-KIT 339	740158522	VALVE SPACER	3
11-KIT 339	740160322	VALVE FRONT SEAL	3
12-KIT 339	740159512	VALVE SEAT	3
13-KIT 339	740160322	VALVE FRONT SEAL	3
14-KIT 339	740162512	VALVE POPPET-INLET SIDE	3
15-KIT 339	740171512	VALVE SPRING-INLET SIDE	3
16-KIT 339	740225512	SPRING GUIDE	3
17-KIT 342	803208302	O-RING DIA.2,62X36,14	3
18	740243512	SLEEVE	3
19-KIT 342	803209102	O-RING DIA.2,62X40,95	3
20-KIT 357-358	802022002	HIGH PRESSURE SEAL DIA.15X25X9,3	3
21-KIT 357	740241522	FRONT GLAND DIA.15	3
22-KIT 357-358	803209902	O-RING DIA.2,62X53,65	3
23-KIT 357-358	802021002	LOW PRESSURE "U" PACKING DIA.15x23x7	3
24-KIT 357	740240522	REAR GLAND DIA.15	3
25-KIT 357-358	803209702	O-RING DIA.2,62X48,89	3
26-KIT 342	803062002	O-RING DIA.1,78X8,73	2
29	852520102	PLUG 1/8" DIN 906 INOX	2
30	740169072	CRANKCASE SPACER	1
31	740242512	CERAMIC PISTON DIA.15	3
32	830100002	PRESSURE GAUGE 0-1600 BAR (OPTIONAL)	1
33	84366000.2	PRESSURE GAUGE SEAL (OPTIONAL)	1
34	835102002	PRESSURE GAUGE CONIC PAD (OPTIONAL)	1
35	745820973	PRESSURE GAUGE KIT (OPTIONAL)	1
37	863300002	BOLT M10X30 UNI 5931	12
38	740022082	BEARING SUPPORT	2
39	740050652	SHIM 0,1mm	1
39	740051652	SHIM 0,2mm	2
40-KIT 342	803291102	O-RING DIA.3,53X107,5	2
41	812860002	CONICAL ROLLER BEARING 33111	2

POS.	CODICE *PART NO. REF.*	**DENOMINAZIONE** - DESCRIPTION - *DESCRIPTION*	Q.TY
42	740088322	OIL SEAL SPACER	3
43-KIT235-342	802194002	OIL SEAL DIA.45X65X8	3
44	740125512	PLUNGER ROD	3
45	740008492	PLUNGER ROD PIN	3
46	800009002	SNAP RING DIA.20	6
47	740086112	CONNECTING ROD	3
48	804466002	BUSHING DIA.55X60X60	3
49	740025262	SPLINED CRANKSHAFT 1" 3/8	1
51	740001082	PUMP CRANKCASE	1
52	853539002	OIL FILLER PLUG WITH VENT	1
53-KIT 342	740049722	BACK COVER SEAL	1
54	740002082	BACK COVER	1
55-KIT 342	853515502	OIL SIGHT GLASS	1
56	862261002	BOLT M6X30 UNI 5931	1
57-KIT 342	824107002	PLUG SEAL	1
58	852579002	PLUG G.3/8"	1
59-KIT 342	802251002	OIL SEAL DIA.55X72X8	2
60	864140002	BOLT M14X30 UNI 5737	6
61	844006002	WASHER DIA.16X27X1,5	6
62	740030612	MOUNTING RAIL	2
63	749802973	MOUNTING RAIL KIT	1
64	861690973	SAFETY VALVE (OPTIONAL)	1
65	861690202	ROPTURE DISC 1137-1242 BAR (OPTIONAL)	1
66	852695502	PLUG G.3/4" SS	1
67	824180002	GASKET DIA.27X36X1	1

REPAIR KIT		ITEM NO,s INCLUDED	PCS.
KIT 235	745006973	SPARE PARTS KIT	3
KIT 339	745015973	SPARE PARTS KIT	30
KIT 357	745019973	SPARE PARTS KIT	21
KIT 358	745020973	SPARE PARTS KIT	15
KIT 342	745018973	SPARE PARTS KIT	16