# CK 2216.1 - 2220.1

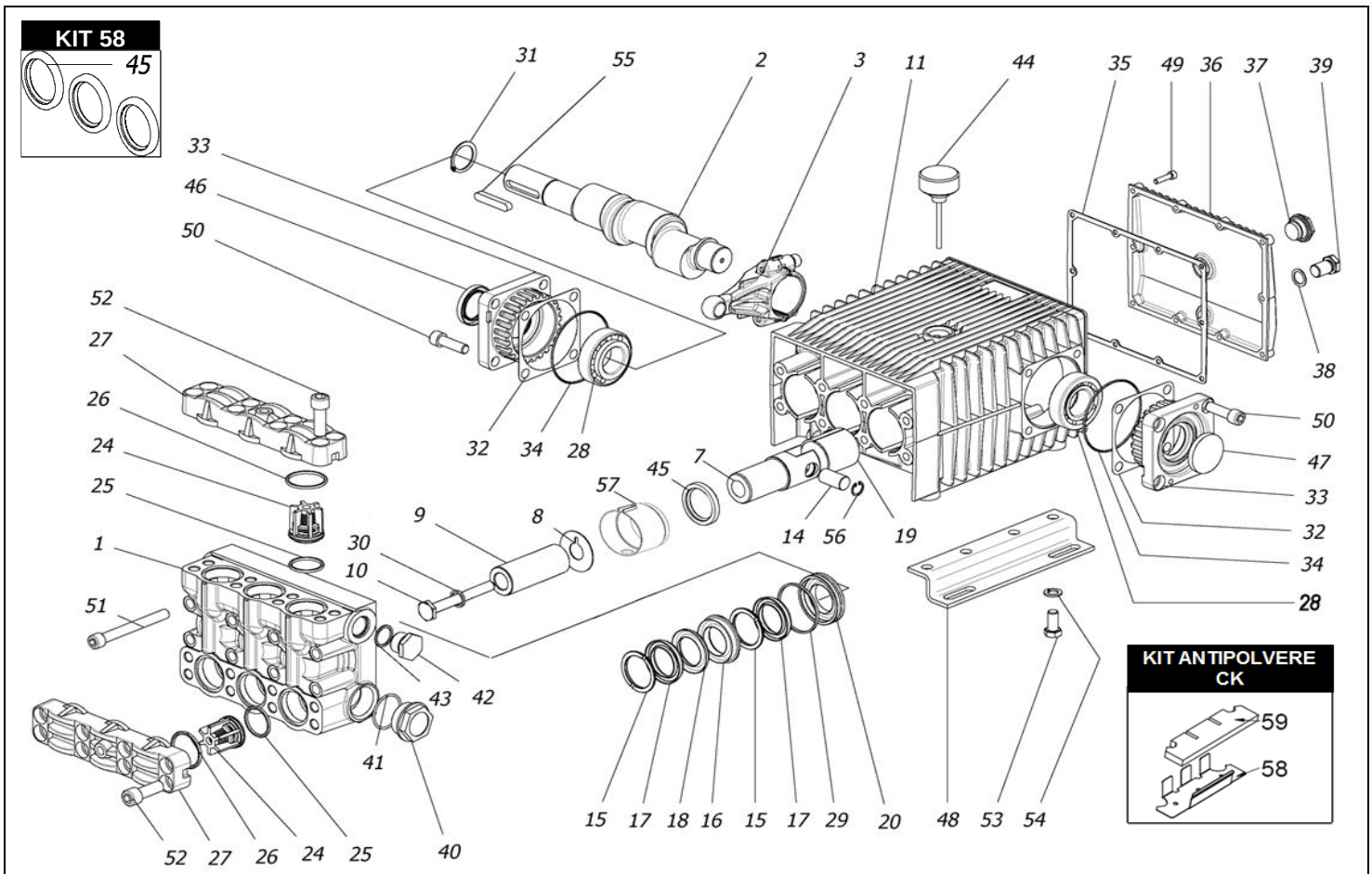


## KIT 47

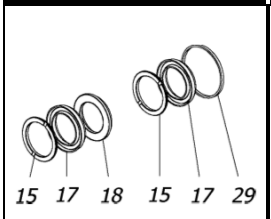


## KIT 46

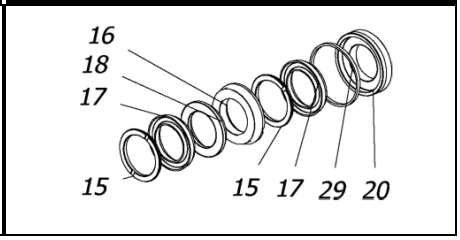


## KIT 44

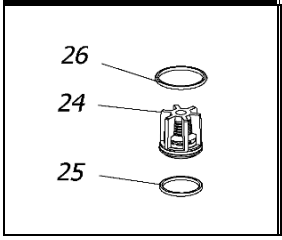


## KIT 171

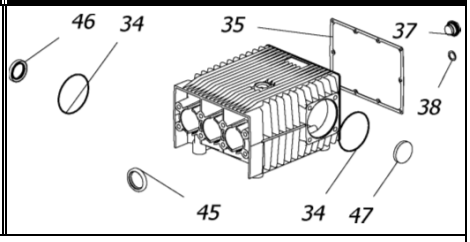


| POS. | CODICE PART NO. *RÉF.* | DENOMINAZIONE - DESCRIPTION - *DESCRIPTION* | Q.TY |
|---|---|---|---|
| 1 | 730508282 | PUMP HEAD | 1 |
| 2 | 730359262 | CRANKSHAFT (CK 2216) | 1 |
| 2 | 730360262 | CRANKSHAFT (CK 2220) | 1 |
| 3 | 730417112 | CONROD | 3 |
| 7 | 730485512 | PLUNGER ROD | 3 |
| 8 | 844212002 | WASHER | 3 |
| 9 | 730459182 | CERAMIC PISTON 30x79 | 3 |
| 10 | 864091002 | BOLT M12X100 UNI 5737 INOX | 3 |
| 11 | 730506092 | CRANKCASE | 1 |
| 14 | 852007402 | PISTON PIN | 3 |
| 15 -Kit 46-47 | 730309322 | THRUST PIN | 6 |
| 16 -Kit 46 | 730307532 | FRONT GLAND | 3 |
| 17 -Kit 46-47 | 802165002 | V PACKING DIA. 30-45 | 6 |
| 18 -Kit 46-47 | 730035322 | ANTIEXTRUSION RING | 3 |
| 19 | 804470002 | BUSHING | 3 |
| 20 -Kit 46 | 730446532 | BACK GLAND | 3 |
| 24 -Kit 44 | 739824973 | VALVES ASSY | 6 |
| 25 -Kit 44 | 803253002 | O-RING | 6 |
| 26 -Kit 44 | 803263002 | O-RING | 6 |
| 27 | 730126282 | VALVES COVER | 2 |
| 28 | 812940002 | BEARING | 2 |
| 29 -Kit 46-47 | 803283002 | O-RING | 3 |
| 30 | 843898002 | COPPER WASHER | 3 |
| 31 | 801264002 | SNAP RING | 1 |
| 32 | 730413652 | SHIM 0.1 | 1 |
| 32 | 730414652 | SHIM 0.2 | 2 |
| 33 | 730477092 | BEARING SUPPORT | 2 |
| 34 -Kit 171 | 803210672 | O-RING | 2 |
| 35 -Kit 171 | 730065722 | GASKET | 1 |
| 36 | 730475092 | BACK COVER | 1 |
| 37 -Kit 171 | 853515502 | OIL SIGHT GLASS | 1 |

| POS. | CODICE PART NO. *RÉF.* | DENOMINAZIONE - DESCRIPTION - *DESCRIPTION* | Q.TY |
|---|---|---|---|
| 38 -Kit 171 | 824107002 | GASKET | 1 |
| 39 | 852579002 | PLUG G 3/8 | 1 |
| 40 | 852740532 | PLUG G1"1/4 | 1 |
| 41 | 803209002 | O-RING | 1 |
| 42 | 852693532 | PLUG G3/4 | 1 |
| 43 | 803218002 | O-RING | 1 |
| 44 | 853516002 | OIL FILLER PLUG | 1 |
| 45 -Kit 58-171 | 802180002 | OIL SEAL | 3 |
| 46 -Kit 171 | 802143002 | OIL SEAL | 1 |
| 47 -Kit 171 | 802099602 | CAP | 1 |
| 48 | 730024612 | MOUNTING RAIL | 2 |
| 49 | 862216002 | BOLT | 10 |
| 50 | 863910002 | BOLT | 8 |
| 51 | 864120002 | BOLT | 8 |
| 52 | 864200002 | BOLT | 16 |
| 53 | 863703002 | BOLT | 6 |
| 54 | 843844002 | WASHER | 6 |
| 55 | 806585002 | TAB | 1 |
| 56 | 801137002 | SNAP RING D. 18 | 6 |
| 57 | 730528322 | OIL SEAL SPACER (FORM 09/13) | 3 |
| 58 - DUST KIT CK | 730531612 | DUST SHEET | 1 |
| 59 - DUST KIT CK | 730531722 | DUST FILTER | 1 |

| REPAIR KIT | ITEM NO,s INCLUDED | | PCS. |
|---|---|---|---|
| KIT 44 | 739835973 | SPARE PARTS KIT | 18 |
| KIT 46 | 739836973 | SPARE PARTS KIT | 24 |
| KIT 47 | 739837973 | SPARE PARTS KIT | 18 |
| KIT 58 | 739842973 | SPARE PARTS KIT | 3 |
| DUST KIT CK | 730531973 | SPARE PARTS KIT | 2 |
| KIT 171 | 739872973 | SPARE PARTS KIT | 10 |
| HOT WATER CONVERSION KIT (85°C-185°F) | | | |
| kit 203 | 739874973 | H.W. PACKING SEALING KIT | 24 |
| kit 251 | 739916973 | H.W. VALVE KIT | 18 |