C1538

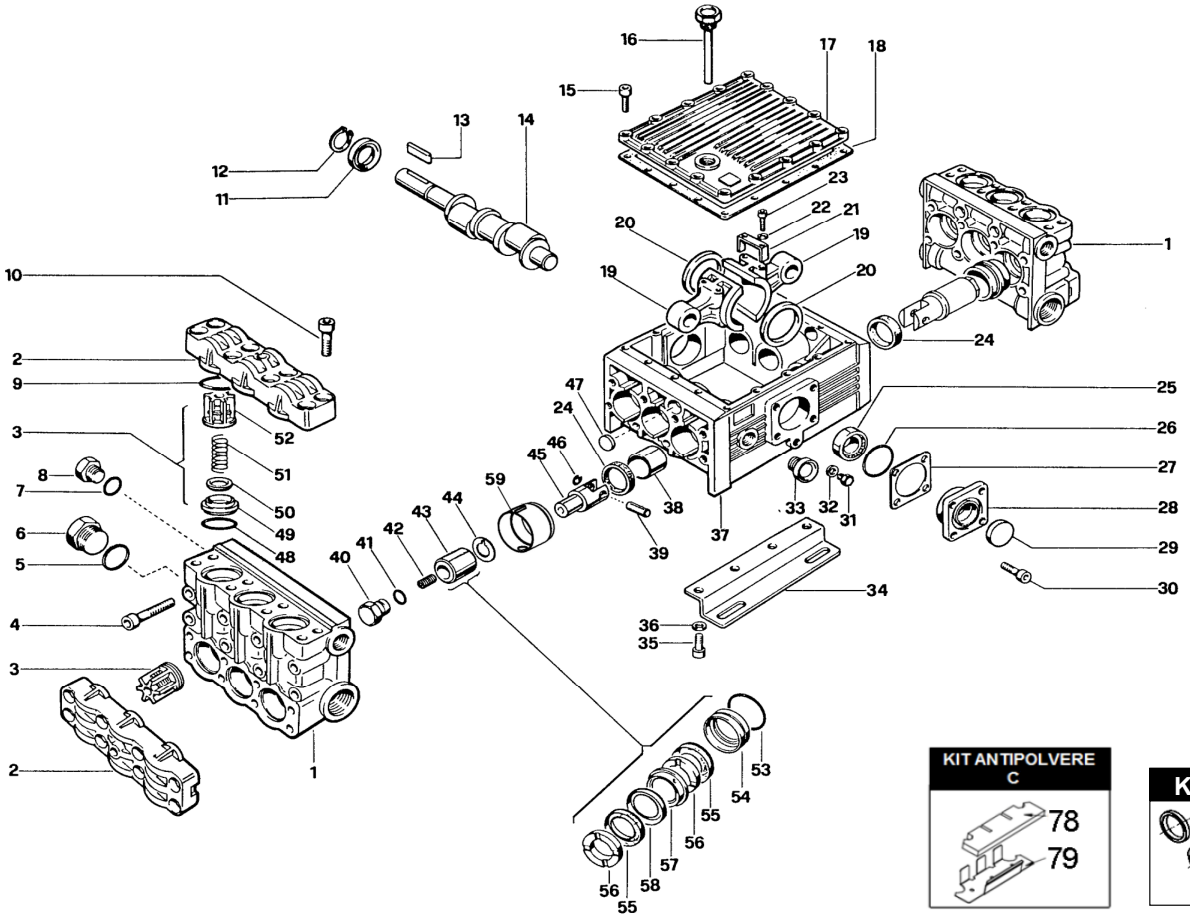

KIT 53

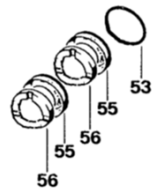

KIT 52

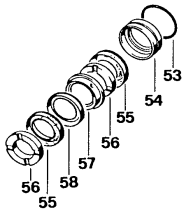

KIT 45

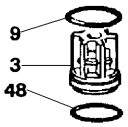

KIT 191

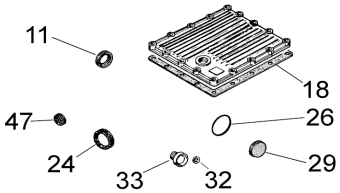

POS.	CODICE PART NO. RÉF.	DENOMINAZIONE - DESCRIPTION - DESCRIPTION	Q.TY
1	730338282	BRASS PUMP HEAD DIA.45	2
2	730126282	VALVES COVER	4
3-kit 45	739824973	VALVES ASSY	12
4	864120002	BOLT TCEI M12X110 UNI 5931	16
5	803209002	O-RING DIA.2,62X39,34	2
6	852740532	PLUG G 1"1/4	2
7	803218002	O-RING DIA.3X22	2
8	852693532	CAP G3/4	2
9-kit 45	803263002	O-RING DIA.3,53X42,86	12
10	864200002	BOLT TCEI M14X40 UNI 5931	32
11-kit 191	802143002	OIL SEAL	1
12	801264002	SNAP RING DIA.35	1
13	806585002	TAB 10X8X55	1
14	730311262	CRANKSHAFT	1
15	862216002	BOLT M6X25	16
16	853519002	OIL FILLING PLUG	1
17	760349092	CRANKCASE COVER	1
18-kit 191	760065722	GASKET	1
19	760301112	BRONZE CONROD	6
20	760302762	RING	6
21	760303612	CONROD FORK	6
22	843651502	WASHER DIA.5,3X9X0,9	12
23	861933002	BOLT TCEI M5X14 UNI 5931	12
24-kit 59-191	802180002	OIL SEAL DIA.40X55X7	6
25	812859002	CONICAL ROLLER BEARING DIA.35X72X24,25	2
26-kit 191	803290002	O-RING DIA.85,32X3,53	1
27	730060652	SHIM	1
28	730478092	CRANKCASE COVER	2
29-kit 191	802099602	CAP	1
30	863696002	BOLT TCEI M12X25	8
31	852579002	PLUG G 3/8	1
32-kit 191	824109002	COPPER GASKET DIA.17X22X1	1
33-kit 191	853515002	OIL SIGHT GLASS	1
34	730024612	MOUNTING BRACKET	2

POS.	CODICE PART NO. RÉF.	DENOMINAZIONE - DESCRIPTION - DESCRIPTION	Q.TY
35	863740002	BOLT M12X30 UNI 5739 8G	4
36	843906002	WASHER DIA.13	4
37	760350082	PUMP CRANKCASE	1
38	804465002	ANTIFRICTION BUSH DIA.40X44X50	6
39	852007302	PISTON PIN DIA.18X30	6
40	730051532	PLUG	6
41	803182502	O-RING DIA.2,62X17,13	6
42	863900002	SCREW STEI M12X40	6
43	530018182	CERAMIC PISTON DIA.38 MM	6
44	730305652	BRASS WASHER	6
45	730224512	PLUNGER ROD	6
46	800040002	CIRCLIP DIA.18	12
47-kit 191	802089502	CAP	2
48-kit 45	803253002	O-RING DIA.3,53X34,52	12
53-kit 52-53	803220002	O-RING DIA.3,0X57	6
54-kit 52	730316532	REAR GLAND DIA.38-58	6
55-kit 52-53	802170152	V PACKING DIA.38X58	12
56-kit 52-53	730317322	THRUST RING	12
57-kit 52	730315532	FRONT GLAND DIA.38-58	6
58-kit 52-53	730038322	ANTIEXTRUSION RING	6
59	730503322	OIL SEAL SPACER (FROM 09/13)	6
78- DUST KIT CK	760368722	DUST SHEET	1
79- DUST KIT CK	760367612	DUST FILTER	1
REPAIR KIT	**NO.s INCLUDED**		**PCS.**
kit 45	769800973	SPARE PARTS KIT	36
kit 52	769803973	SPARE PARTS KIT	48
kit 53	769804973	SPARE PARTS KIT	36
kit 59	769812973	SPARE PARTS KIT	6
kit 191	769842973	SPARE PARTS KIT	15
R CONVERSION KIT (85°C-185°F)			
kit 207	769844973	H.W. PACKING SEALING KIT	48
kit 252	769881973	H.W. VALVE KIT	36
DUST KIT CK	760369973	SPARE PARTS KIT	2