CPQ 1316 - 1414

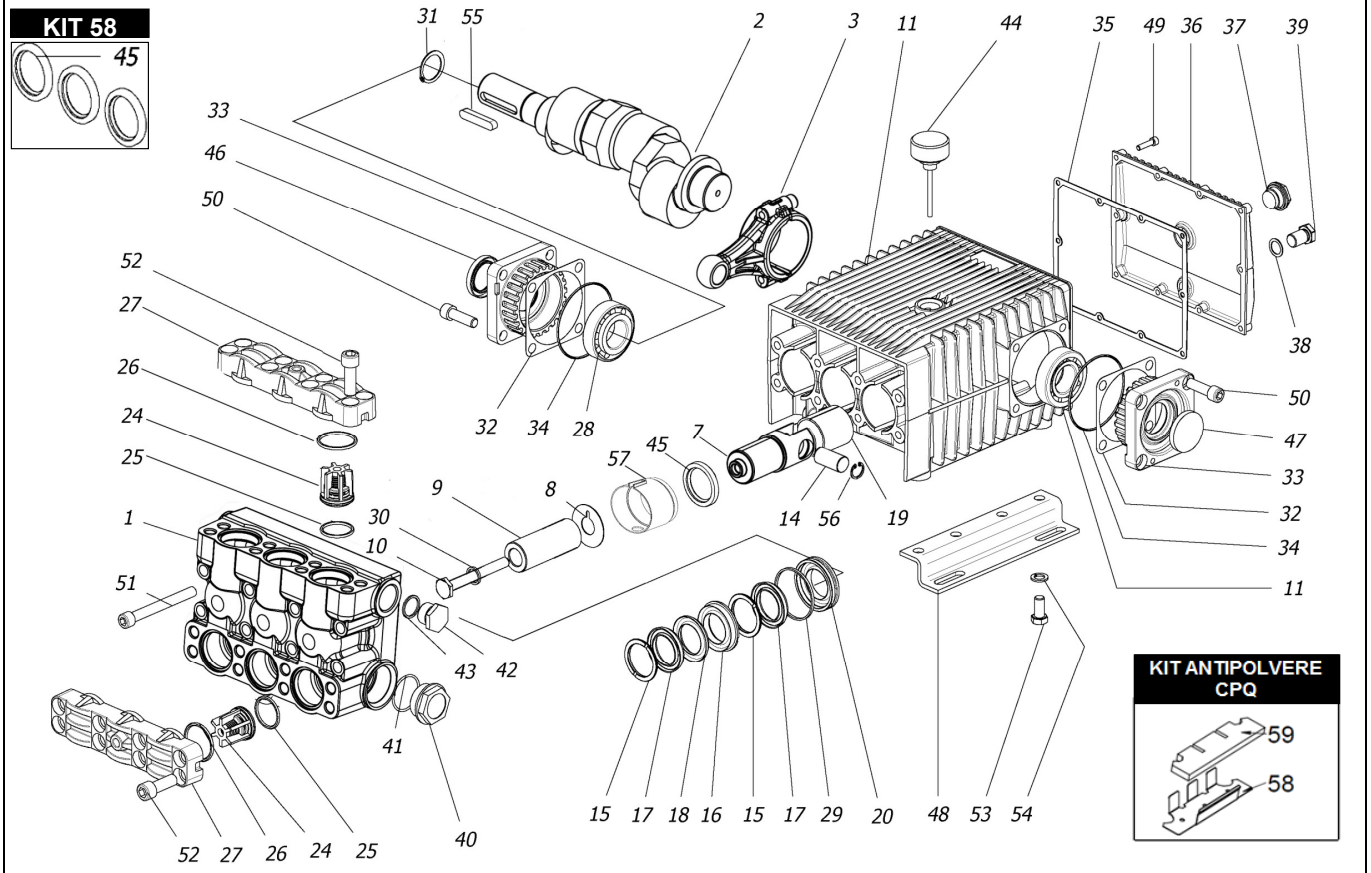

KIT 279

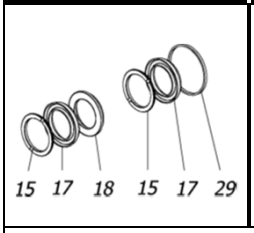

KIT 278

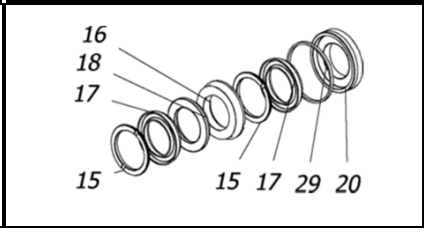

KIT 44

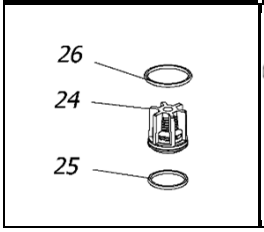

KIT 171

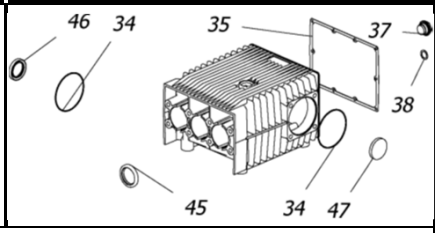

POS.	CODICE PART NO. RÉF.	DENOMINAZIONE - DESCRIPTION - DESCRIPTION	Q.TY
1	730468282	PUMP HEAD	1
2	730344262	CRANKSHAFT CPQ 1316	1
2	730346262	CRANKSHAFT CPQ 1414	1
3	730482112	CONROD	3
7	730483512	PLUNGER ROD	3
8	844212002	WASHER	3
9	730462182	CERAMIC PISTON 36X80	3
10	864091002	SCREW M12X100 UNI 5737	3
11	730524092	CRANKCASE	1
14	730484492	PISTON PIN	3
15 -Kit 278-279	730466322	THRUST PIN	6
16 -Kit 278	730470532	FRONT GLAND	3
17 -Kit 278-279	802167002	V PACKING DIA. 36-56	6
18 -Kit 278-279	730464322	ANTIEXTRUSION RING	3
19	804470002	BUSHING	3
20 -Kit 278	730469532	BACK GLAND	3
24 -Kit 44	739824973	VALVES ASSY	6
25 -Kit 44	803253002	O-RING	6
26 -Kit 44	803263002	O-RING	6
27	730126282	VALVES COVER	2
28	812940002	BEARING	2
29 -Kit 278-279	803220002	O-RING	3
30	843898002	GASKET	3
31	801264002	SNAP RING	1
32	730413652	SHIM 0.1	1
32	730414652	SHIM 0.2	2
33	730477092	BEARING SUPPORT	2
34 -Kit 171	803210672	O-RING	2
35 -Kit 171	730065722	GASKET	1

POS.	CODICE PART NO. RÉF.	DENOMINAZIONE - DESCRIPTION - DESCRIPTION	Q.TY
36	730475092	BACK COVER	1
37 -Kit 171	853515502	OIL SIGHT GLASS	1
38 -Kit 171	824107002	GASKET	1
39	852579002	PLUG G 3/8"	1
40	852753532	PLUG G1"1/2	1
41	803209102	O-RING	1
42	852712532	PLUG G 1"	1
43	824230002	WASHER	1
44	853516002	OIL FILLER PLUG	1
45 -Kit 58-171	802180002	OIL SEAL	3
46 -Kit 171	802143002	OIL SEAL	1
47 -Kit 171	802099602	CAP	1
48	730024612	MOUNTING RAIL	2
49	862216002	BOLT	10
50	863696002	BOLT	8
51	864120002	BOLT	8
52	864200002	BOLT	16
53	863703002	BOLT	6
54	843844002	WASHER	6
55	806585002	TAB	1
56	801161002	SNAP RING D. 22	6
57	730528322	OIL SEAL SPACER (FROM 09/13)	3
58 - DUST KIT CPQ	730531612	DUST SHEET	1
59 - DUST KIT CPQ	730531722	DUST FILTER	1

REPAIR KIT	ITEM NO,s INCLUDED		PCS.
KIT 44	739835973	SPARE PARTS KIT	18
KIT 278	739922973	SPARE PARTS KIT	24
KIT 279	739923973	SPARE PARTS KIT	18
KIT 58	739842973	SPARE PARTS KIT	3
DUST KIT CPQ	730531973	SPARE PARTS KIT	2
KIT 171	739872973	SPARE PARTS KIT	10

BERTOLINI pumps