RAL 1830-2130-2330-2530-2730 RAS 4447-4455-4470-4482 RA 1830-Slow PREMIUM

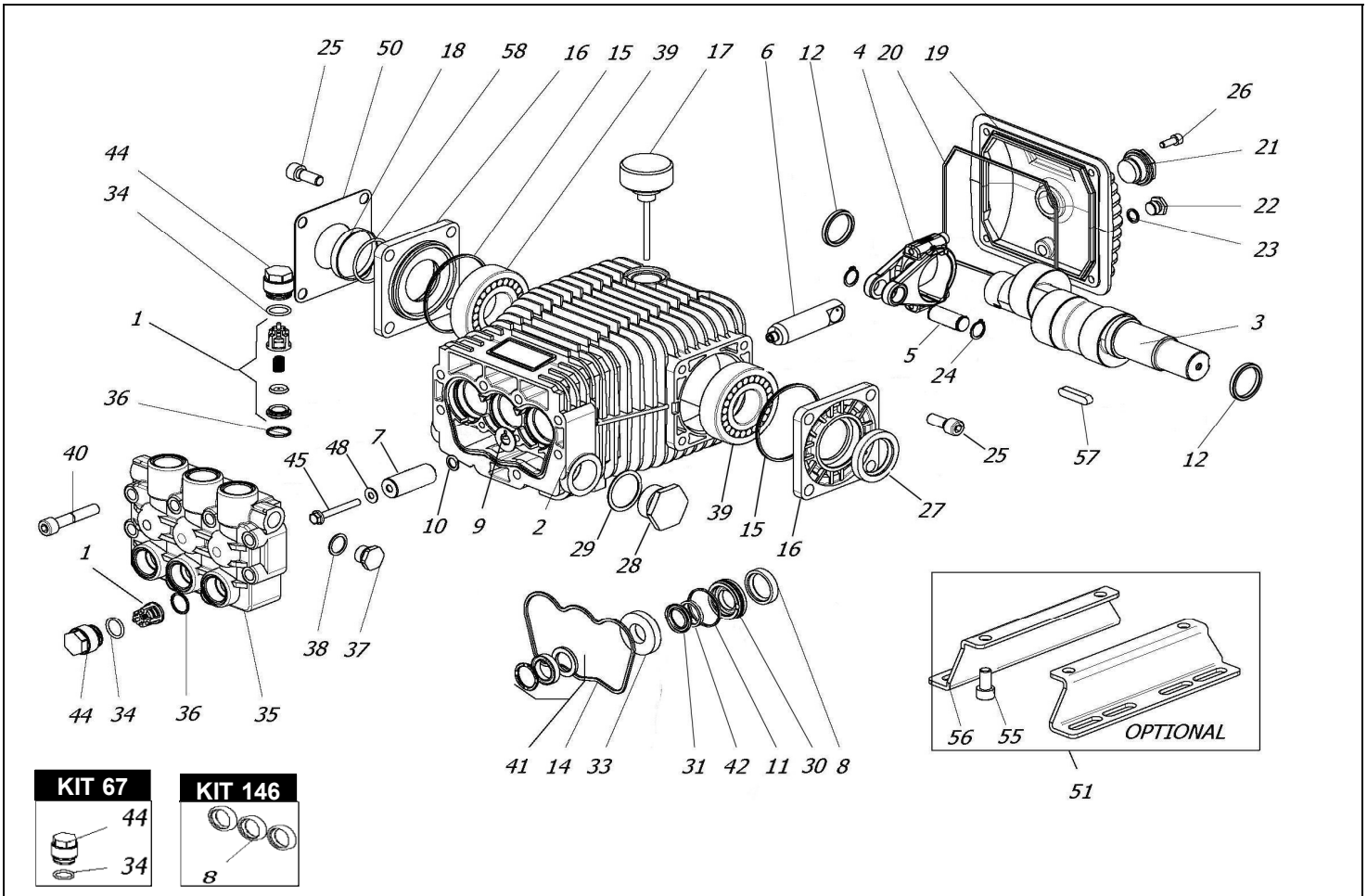

KIT 283

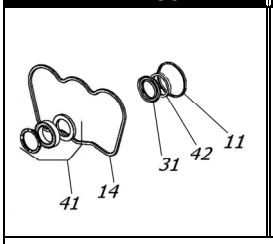

KIT 282

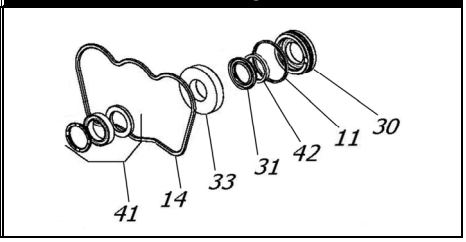

KIT 162

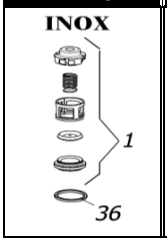

KIT 148

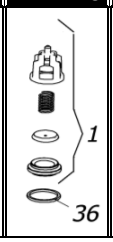

KIT 147

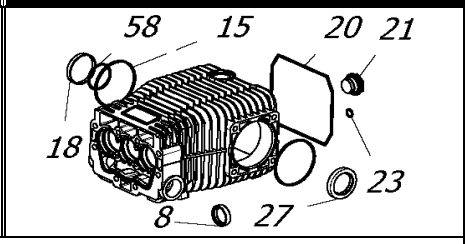

POS.	CODICE PART NO. RÉF.	DENOMINAZIONE - DESCRIPTION - DESCRIPTION	Q.TY
1-kit 148	089806973	VALVES ASSEMBLY	6
1-kit 162	089800973	STAINLESS STEEL VALVES ASSEMBLY (optional	6
2	080001092	PUMP CRANKCASE	1
3	080267262	CRANKSHAFT (RAL 2730 - RAS 4482-RA 1830-S)	1
3	080241262	CRANKSHAFT (RAL 2530)	1
3	080245262	CRANKSHAFT (RAL 2330 - RAS 4470)	1
3	080246262	CRANKSHAFT (RAL 2130)	1
3	080253262	CRANKSHAFT (RAL 1830 - RAS 4455)	1
3	080269262	CRANKSHAFT (RAS 4447)	1
4	080289112	CONNECTING ROD	3
5	080243492	PISTON PIN	3
6	080270512	PLUNGER ROD	3
7	080070182	CERAMIC PISTON D.20	3
8-kit 146-147	802092002	OIL SEAL D25	3
9	843827002	WASHER	3
10	080274532	PISTON SPACER	3
11-kit 282-283	803080102	O-RING	3
12	080271412	BEARING SPACER	2
14-kit 282-283	080021312	PARTICULAR PROFILE GASKET	1
15-kit 147	803210642	O-RING	2
16	060017092	BEARING COVER	2
17	060020322	OIL FILLER PLUG WITH DIP STICK	1
18-kit 147	060019322	OIL SIGHT GLASS (FROM 06/2020)	1
18	060059322	OIL SIGHT GLASS (BEFORE 06/2020)	1
19	080006092	CRANKCASE COVER	1
20-kit 147	803210882	O-RING	1
21-kit 147	853515502	OIL SIGHT GLASS + O-RING	1
22	852543502	PLUG G1/4X9	1
23-kit 147	803057002	O-RING	1
24	801140002	CIRCLIP	6
25	863265002	BOLT	8
26	862108002	BOLT	4
27-kit 147	802143002	OIL SEAL	1
28	852712002	PLUG G1"	1

POS.	CODICE PART NO. RÉF.	DENOMINAZIONE - DESCRIPTION - DESCRIPTION	Q.TY
28	852712532	PLUG G1 BRASS (OPTIONAL)	1
29	824230002	GASKET	1
30-kit 282	080118532	BACK GLAND D20	3
31-kit 282-283	802301102	"U" PACKING D.20	3
33-kit 282	080114532	FRONT GLAND D20	3
34-kit 67	803182802	O-RING	6
35	080003282	PUMP HEAD	1
36-kit 148-162	803069002	O-RING	6
37	852579002	PLUG G3/8	1
37	852579532	PLUG G3/8 BRASS (OPTIONAL)	1
38	824109002	GASKET	1
39	812870002	BEARING	2
40	863510002	BOLT	8
41-kit 282-283	802066402	SUPER "U" PACKING ASSEMBLY D.20	3
42-kit 282-283	802301202	SCRAPER RING	3
44-kit 67	070040282	EX. DEEP SEALING VALVE CAP M27x1,5	6
45	862415602	BOLT	3
48	843620052	COPPER WASHER	3
50	060123612	SHEET	1
51	089829973	MOUNTING RAILS KIT (OPTIONAL)	1
55	863212002	BOLT (OPTIONAL)	4
56	080053612	MOUNTING RAIL (OPTIONAL)	2
57	806534002	TAB 8X7X35	1
58-kit 147	803262002	O-RING (FROM 06/2020)	1
58	803265002	O-RING (BEFORE 06/2020)	1

REPAIR KIT	ITEM NO,s INCLUDED		PCS.
kit 67	049839973	SPARE PARTS KIT	12
kit 146	089816973	SPARE PARTS KIT	3
kit 147	089817973	SPARE PARTS KIT	11
kit 148	089818973	SPARE PARTS KIT	12
kit 282	089862973	SPARE PARTS KIT	25
kit 283	089863973	SPARE PARTS KIT	19
kit 162	089833973	SPARE PARTS KIT (OPTIONAL)	12