RBS 2335-2735

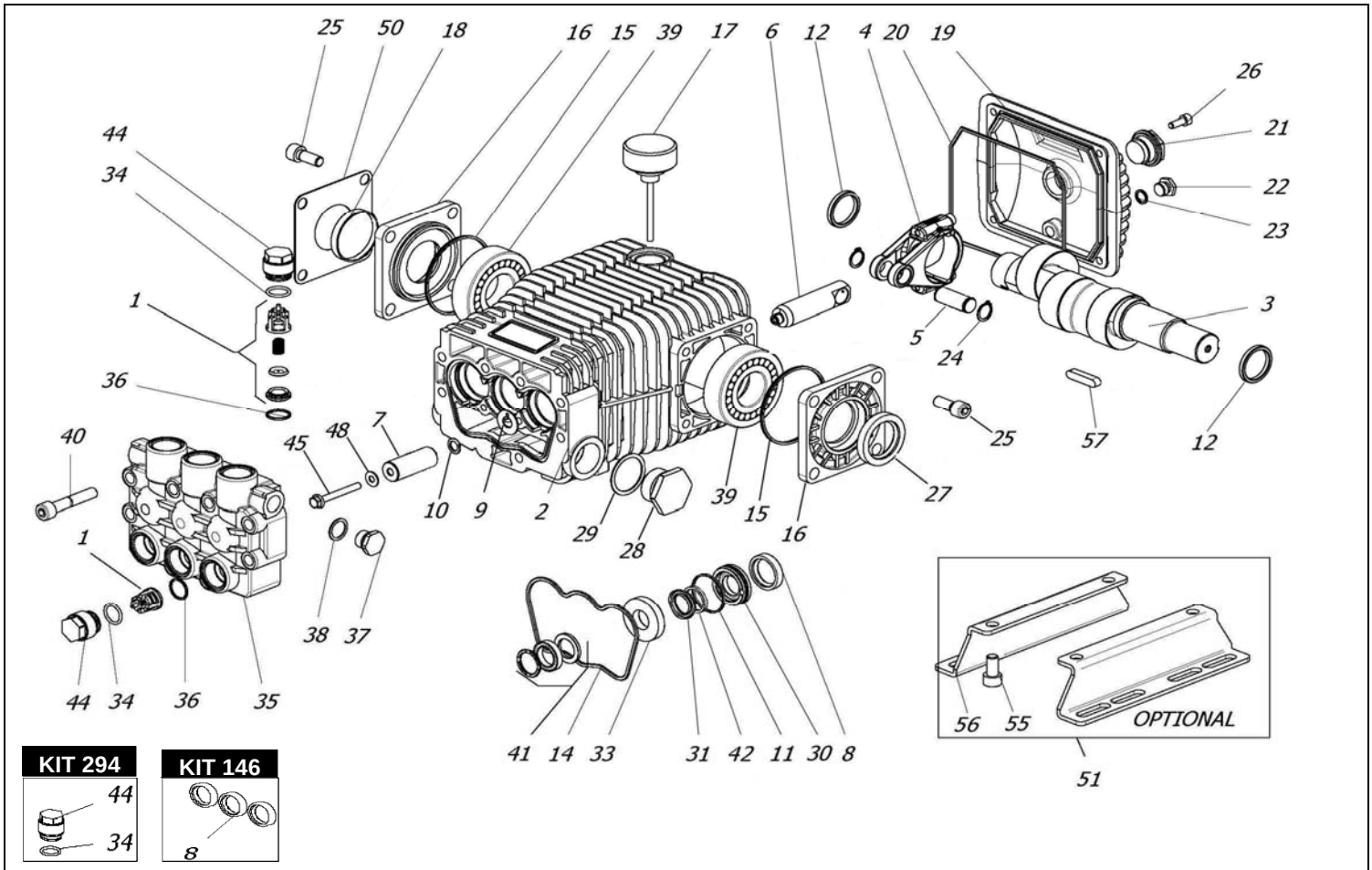

KIT 273

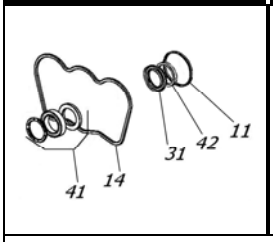

KIT 272

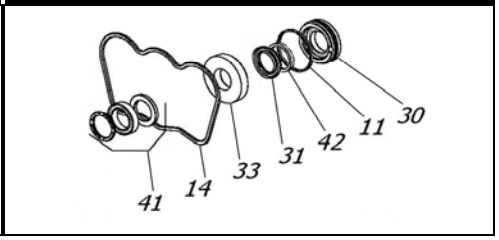

KIT 148

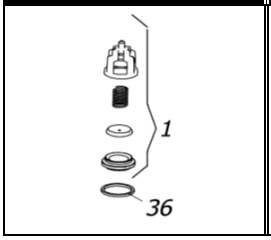

KIT 210

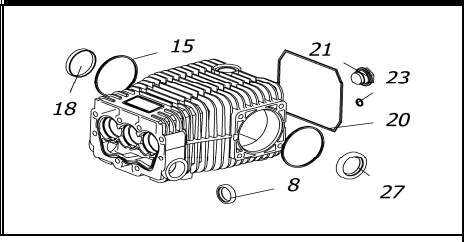

POS.	CODICE PART NO. RÉF.	DENOMINAZIONE - DESCRIPTION - *DESCRIPTION*	Q.TY
1-kit 148	089806973	VALVES ASSEMBLY	6
1-kit 162	089800973	STAINLESS STEEL VALVES ASSEMBLY (OPTIONAL)	6
2	080001092	PUMP CRANKCASE	1
3	080267262	CRANKSHAFT RBS 2335	1
3	080266262	CRANKSHAFT RBS 2735	1
4	080289112	CONNECTING ROD	3
5	080243492	PISTON PIN	3
6	080270512	PLUNGER ROD	3
7	080272182	CERAMIC PISTON D.22	3
8-kit 146-Kit 210	802092002	OIL SEAL	3
9	843827002	WASHER	3
10	080290512	PISTON SPACER	3
11-kit 272-273	803080102	O-RING	3
12	080271412	BEARING SPACER	2
14-kit 272-273	080021312	PARTICULAR PROFILE GASKET	1
15-kit 210	803210712	O-RING	2
16	080249092	BEARING COVER	2
17	060020322	OIL FILLER PLUG WITH DIP STICK	1
18-kit 210	802099602	OIL CAP	1
19	080006092	CRANKCASE COVER	1
20-kit 210	803210882	O-RING	1
21-kit 210	853515502	OIL SIGHT GLASS + O-RING	1
22	852543502	PLUG G1/4X9	1
23-kit 210	803057002	O-RING	1
24	801140002	CIRCLIP	6
25	863265002	BOLT	8
26	862108002	BOLT	4
27-kit 210	802143002	OIL SEAL	1
28	852712002	PLUG G1	1
28	852712532	PLUG G1 BRASS (OPTIONAL)	1
29	824230002	GASKET	1
30-kit 272	080119532	BACK GLAND	3
31-kit 272-273	802302102	"U" PACKING 22-30	3

POS.	CODICE PART NO. RÉF.	DENOMINAZIONE - DESCRIPTION - *DESCRIPTION*	Q.TY
33-kit 272	080115532	FRONT GLAND	3
34-kit 294	803195002	O-RING	6
35	080122282	PUMP HEAD	1
36-kit 148-162	803069002	O-RING	6
37	852579002	PLUG G3/8	1
37	852579532	PLUG G3/8 BRASS (OPTIONAL)	1
38	824109002	GASKET	1
39	812871002	BEARING	2
40	863510002	BOLT	8
41-kit 272-273	802085402	SUPER "U"PACKING ASSEMBLY D.22-35	3
42-kit 272-273	802302202	SCRAPER RING	3
44-kit 294	080123532	VALVE CAP	6
45	862415602	BOLT	3
48	843620052	COPPER WASHER	3
50	060123612	SHEET	1
51	089829973	MOUNTING RAILS KIT (OPTIONAL)	1
55	863212002	BOLT (OPTIONAL)	4
56	080053612	MOUNTING RAIL (OPTIONAL)	2
57	806534002	TAB 8X7X35	1

REPAIR KIT	ITEM NO,s INCLUDED		PCS.
kit 294	089866973	SPARE PARTS KIT	12
kit 146	089816973	SPARE PARTS KIT	3
kit 210	089839973	SPARE PARTS KIT	10
kit 148	089818973	SPARE PARTS KIT	12
kit 272	089856973	SPARE PARTS KIT	25
kit 273	089857973	SPARE PARTS KIT	19