RX 2340 - 2840 - 3540 - 3840

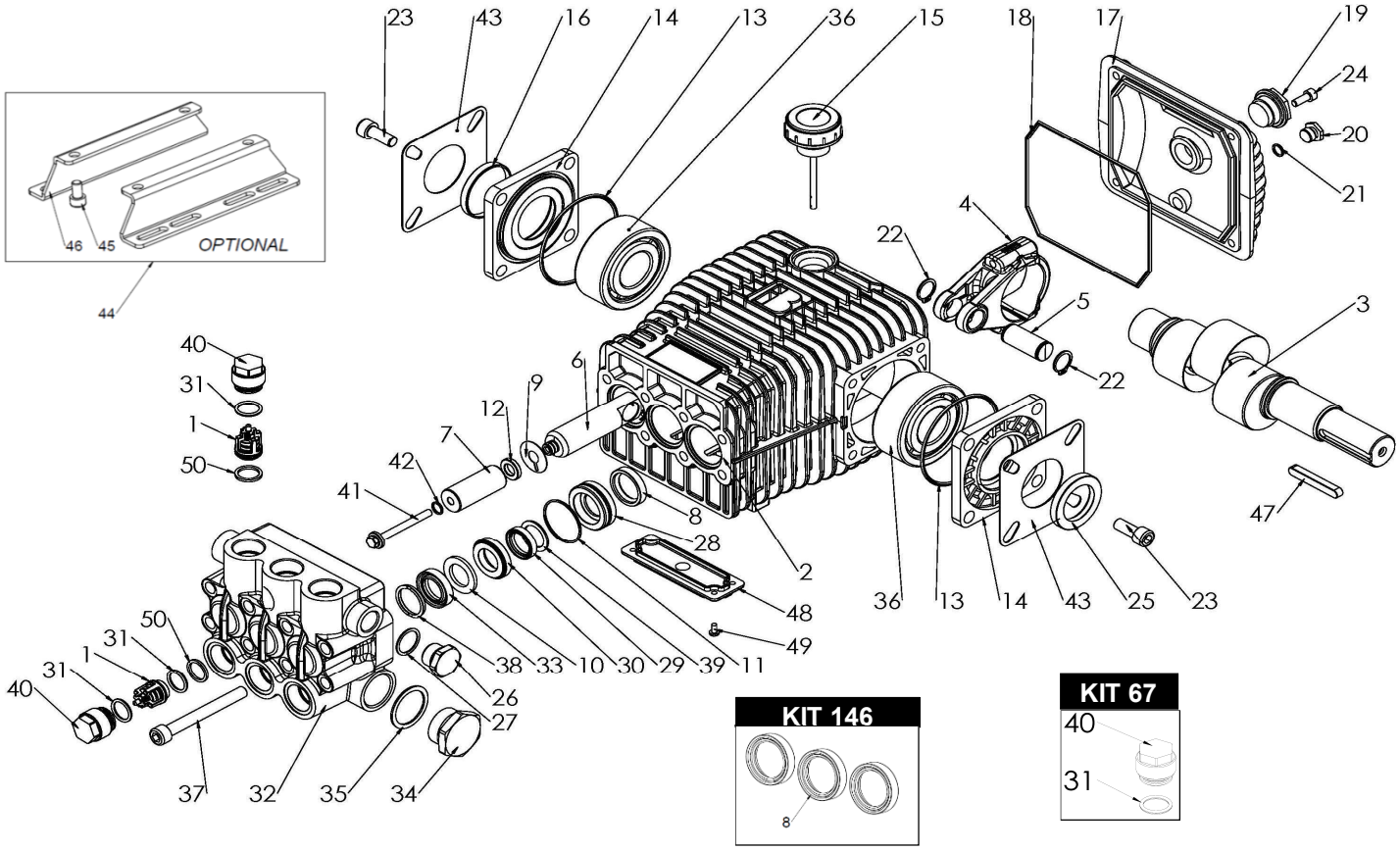

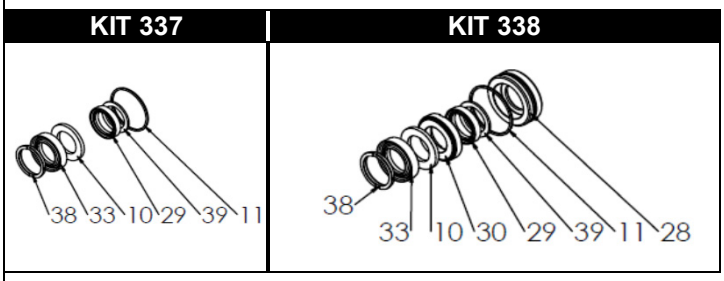

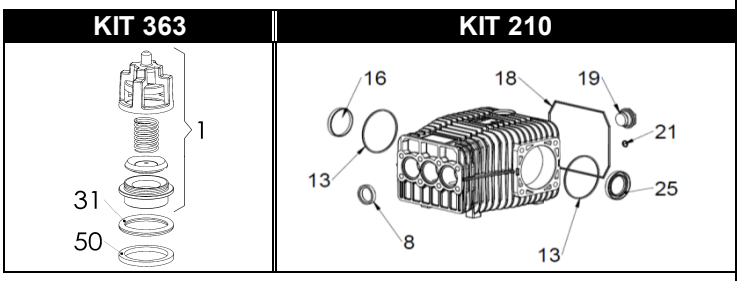

POS.	CODICE PART NO. *RÉF.*	DENOMINAZIONE - DESCRIPTION - *DESCRIPTION*	Q.TY
1-kit 363	189816973	VALVES ASSEMBLY	6
2	180001092	PUMP CRANKCASE	1
3	180026262	CRANKSHAFT (RX 2340)	1
3	180024262	CRANKSHAFT (RX 2840)	1
3	180029262	CRANKSHAFT (RX 3540)	1
3	180023262	CRANKSHAFT (RX 3840)	1
4	080289112	CONNECTING ROD	3
5	080243492	PISTON PIN	3
6	080270512	PLUNGER ROD	3
7	080272182	CERAMIC PISTON D.22	3
8-kit 146-210	802092002	OIL SEAL D25	3
9	843827002	WASHER	3
10-kit 337-338	802098202	ANTIEXTRUSION RING	3
11-kit 337-338	803080202	O-RING	3
12	180020532	SUCTION MANIFOLD	3
13-kit 210	803210712	O-RING	2
14	080249092	BEARING COVER	2
15	060020322	OIL FILLER PLUG WITH DIP STICK	1
16-kit 210	802099602	CAP	1
17	080006092	CRANKCASE COVER	1
18-kit 210	803210882	O-RING	1
19-kit 210	853515502	OIL SIGHT GLASS + O-RING	1
20	852543502	PLUG G1/4X9	1
21-kit 210	803057002	O-RING	1
22	801140002	CIRCLIP	6
23	863265002	BOLT M6X25 UNI 5931	8
24	862108002	BOLT M6X16 UNI 5931	4
25-kit 210	802143002	OIL SEAL	1
26	852629532	PLUG G1/2"	1
27	824140002	GASKET	1
28-kit 338	180007532	BACK GLAND D22	3

POS.	CODICE PART NO. *RÉF.*	DENOMINAZIONE - DESCRIPTION - *DESCRIPTION*	Q.TY
29-kit 337-338	802302102	U PACKING 22	3
30-kit 338	060219532	FRONT GLAND D22	3
31-kit 67-363	803182802	ANELLO OR	12
32	180042282	PUMP HEAD	1
33-kit 337-338	802098002	OIL SEAL	3
34	852712532	PLUG G1"	1
35	824230002	GASKET	1
36	812871002	BEARING	2
37	863593002	BOLT M10X90 12.9 DACROMET	8
38-kit 337-338	802098102	THRUST RING	3
39-kit 337-338	802302202	O-RING	3
40-kit 67	070040282	EX. DEEP SEALING VALVE CAP M27x1,5	6
41	180015432	SPECIAL BOLT M6 A4 700 N/mm^2	3
42	803008002	O-RING 1,5x10 90 SH	3
43	060123612	SHEET	2
44	089829973	MOUNTING RAILS KIT (OPTIONAL)	1
45	863212002	BOLT M10X20 UNI 5931	4
46	080053612	MOUNTING RAIL (OPTIONAL)	2
47	806542202	TAB 8X7X56	1
48	180022322	COVER	1
49	864513002	BOLT M4X8 ISO 7045	4
50-kit 363	080251542	ANTIEXTRUSION RING	6

REPAIR KIT	NO OF ITEM INCLUDED PER KIT		PCS.
kit 67	049839973	SPARE PARTS KIT	12
kit 146	089816973	SPARE PARTS KIT	3
kit 210	089839973	SPARE PARTS KIT	10
kit 337	189813973	SPARE PARTS KIT	18
kit 338	189814973	SPARE PARTS KIT	24
kit 363	189817973	SPARE PARTS KIT	18