KKL 3316 - 3816

from 07/15
from serial number 15070568

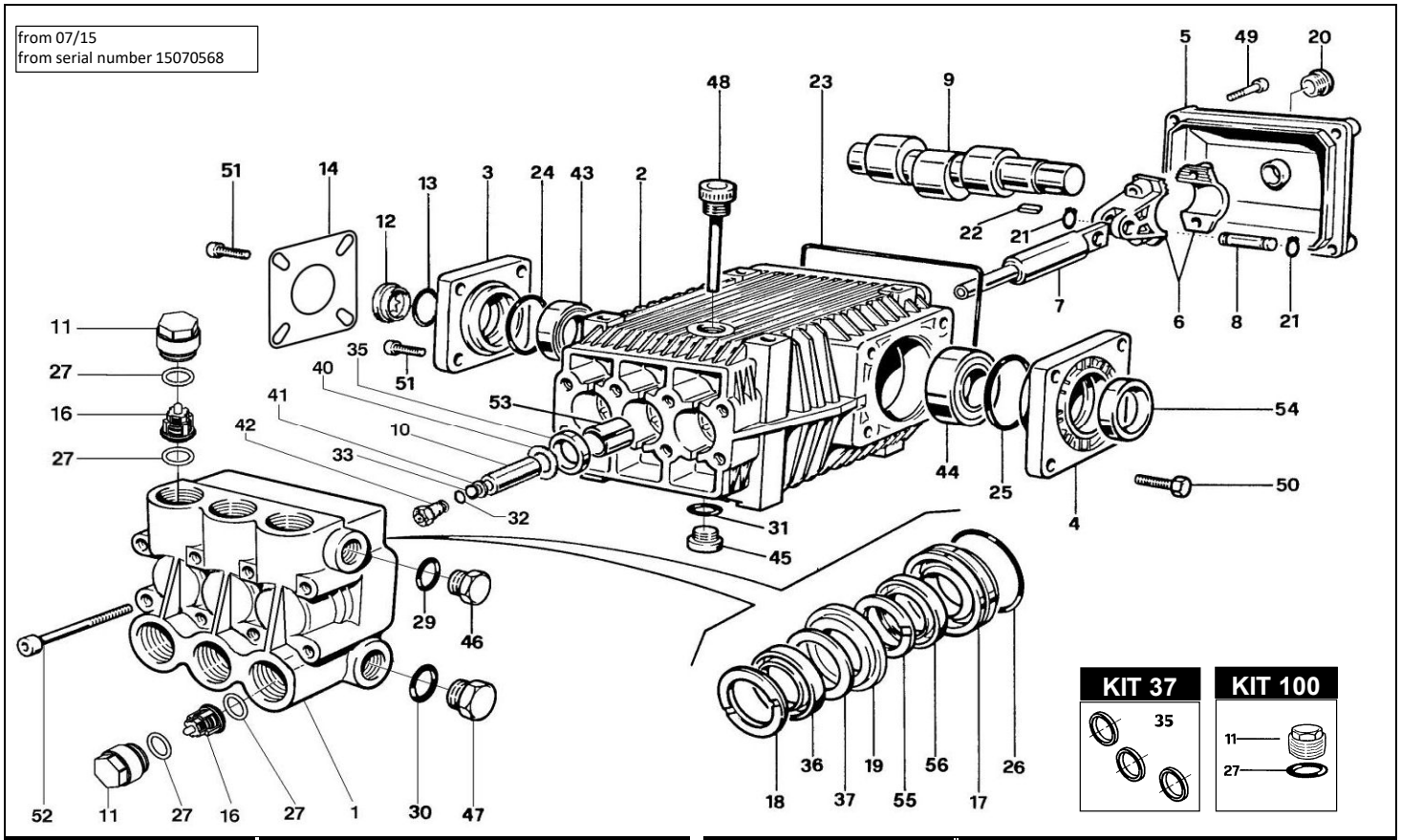

KIT 315

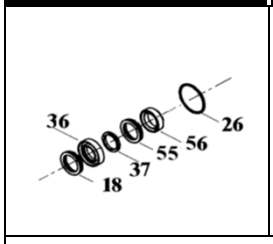

KIT 316

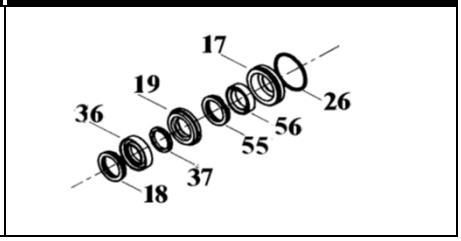

KIT 40

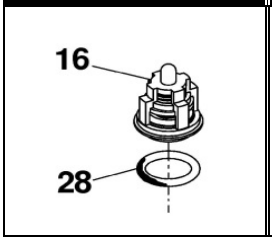

KIT 98

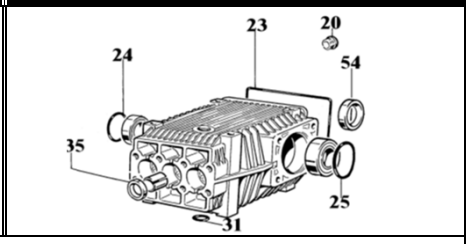

POS.	CODICE PART NO RÉF.	DENOMINAZIONE - DESCRIPTION - *DESCRIPTION*	Q.TY
1	060161282	PUMP HEAD	1
2	060021092	PUMPS CRANKCASE	1
3	060260092	BEARING COVER	1
4	060017092	BEARING COVER	1
5	060006092	CRANKCASE COVER	1
6	069800972	CONNECTING ROD	3
6	862796002	CONNECTING ROD BOLT[22Nm - 16,2lb·ft](*)	6
7	060071512	PLUNGER ROD	3
8	060007492	PISTON PIN	3
9	060164262	CRANKSHAFT KKL 3316	1
9/1	060165262	CRANKSHAFT KKL 3816	1
10	060011182	CERAMIC PISTON	3
11-kit 100	060095532	VALVE CAP [100Nm - 73,8lb·ft]	6
12	060019322	OIL SIGHT GLASS	1
13	803262002	O-RING	1
14	060123612	SHEET FOR OIL SIGHT LOCKING	1
16-kit 40	069801973	VALVES ASSEMBLY	6
17-kit 88	060222532	BACK GLAND	3
18-kit 88-91	802092802	THRUST RING	3
19-kit 88	060221532	FRONT GLAND	3
20-kit 98	853515502	OIL SIGHT GLASS	1
21	801099002	CIRCLIP	6
22	806534002	TAB	1
23-kit 98	803210902	O-RING	1
24-kit 98	803210552	O-RING	1
25-kit 98	803210642	O-RING	1
26-kit 88-91	803080202	O-RING	3
27-kit 40 - 100	803204802	O-RING	12
29	824140002	GASKET	1
30	824230002	GASKET	1
31-kit 98	803204802	O-RING	1
32	803058002	O-RING	3

POS.	CODICE PART NO RÉF.	DENOMINAZIONE - DESCRIPTION - *DESCRIPTION*	Q.TY
33	803902002	ANTI-EXTRUSION RING	3
35-kit 37-98	802090002	OIL SEAL	3
36-kit 88-91	802092602	"U" PACKING	3
37-kit 88-91	060088322	ANTIEXTRUSION RING	3
40	060018682	WASHER	3
41	843646002	WASHER	3
42	060072002	PISTON BOLT	3
43	812848002	ROLLER BEARING	1
44	812870002	ROLLER BEARING	1
45	852687002	CAP [40Nm - 29,5lb·ft]	1
46	852629532	PLUG [70Nm - 51,6lb·ft]	1
47	852712532	CAP BRASS [90Nm - 66,4lb·ft]	1
48	060020322	OIL FILLER PLUG WITH DIP STICK	1
49	862216002	BOLT [10Nm - 7,4lb·ft]	4
50	863265002	BOLT [44Nm - 32,5lb·ft]	4
51	862683002	BOLT [22Nm - 16,2lb·ft]	4
52	863560002	BOLT [44Nm - 32,5lb·ft]	8
53	804300002	SELF-LUBRIFICATING BUSHING	3
54-kit 98	802143002	OIL SEAL	1
55-kit 88-91	802303102	"U" PACKING DIA.25	3
56-kit 88-91	802303202	SCRAPER RING DIA.25	3

REPAIR KIT	ITEM NO,s INCLUDED		PCS.
kit 37	069814973	SPARE PARTS KIT	3
kit 316	069969973	SPARE PARTS KIT	24
kit 315	069968973	SPARE PARTS KIT	18
kit 98	069842973	SPARE PARTS KIT	9
kit 100	069844973	SPARE PARTS KIT	12
kit 40	069817973	SPARE PARTS KIT	12
HOT WATER CONVERSION KIT (85°C-185°F)			
kit 202	069886973	H.W. PACKING SEALING KIT	21
kit 250	069957973	H.W. VALVE KIT	18

Torque values are indicated between brackets [ ].General Tolerance on torque value: 0/-20% . Tolerance on torque value: 0/-10%(*)