VD 140-200-280

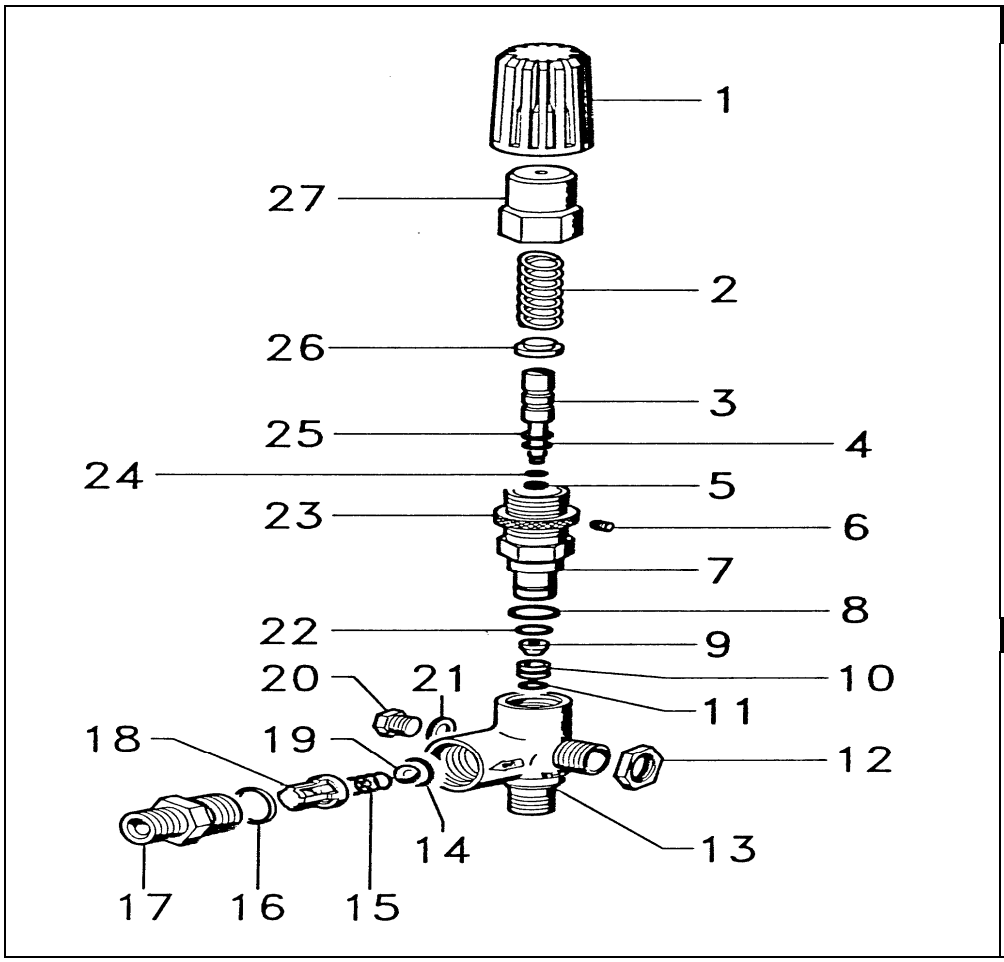

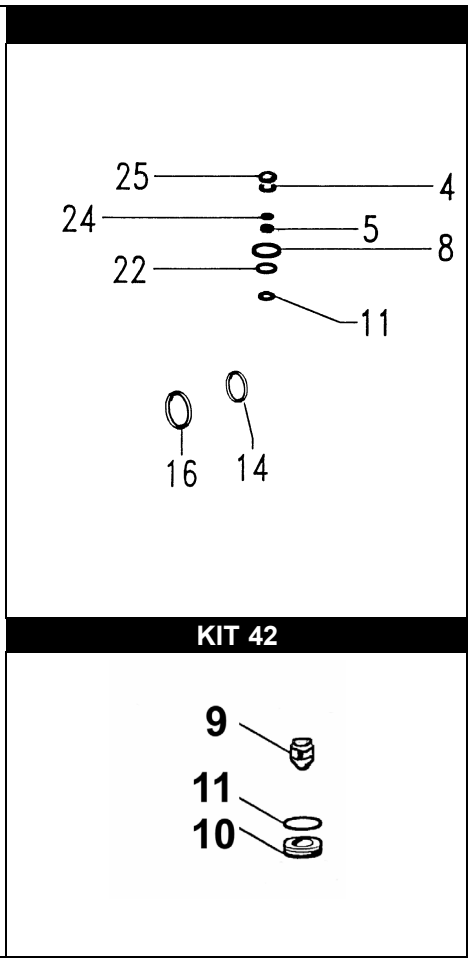

POS.	CODICE PART NO. RÉF.	DENOMINAZIONE - DESCRIPTION - *DESCRIPTION*	Q.TY
1	050128322	GREEN ADJUSTING KNOB VD140-200	1
1	050154322	RED ADJUSTING KNOB VD280	1
2	050119492	SPRING VD 140	1
2	050120492	SPRING VD 200	1
2	050121492	SPRING VD 280	1
3	050099512	PISTON	2
4-Kit 41	803165502	O-RING DIA.2,62X6,02	1
5-Kit 41	050112322	ANTIEXTRUSION RING	1
6	861820002	SCREW M3X6	1
7	050095532	NIPPLE	1
8-Kit 41	803181202	O-RING 121 DIA.2,62X15,88	1
9-Kit 42	050110512	POPPET	1
10-Kit 42	050068512	SEAT	1
11-Kit 41-42	803056002	O-RING DIA 1,78X8,73	1
12	050116532	RING NUT	1
13	050093282	VALVE BODY	1
14-Kit 41	803170502	O-RING DIA.2,62X7,59	1
15	050114492	SPRING	1
16-Kit 41	803195002	O-RING	1
17	050097532	NIPPLE	1
18	050094322	GUIDE	1
19	847455002	BALL	1
20	852543502	CAP G.1/4 X9	1
21	824079002	GASKET	1
22-Kit 41	803175002	O-RING DIA.2,62X10,78	1
23	050098532	RING NUT	1
24-Kit 41	803050502	O-RING DIA.1,78X6,07	2
25-Kit 41	050113322	ANTIEXTRUSION RING	1
26	050111482	WASHER	1
27	050096482	LOCKING NUT	

REPAIR KIT	ITEM NO,s INCLUDED		PCS.
kit 41	059888973	SPARE PARTS KIT	11
kit 42	059889973	SPARE PARTS KIT	3