WBXG 3025

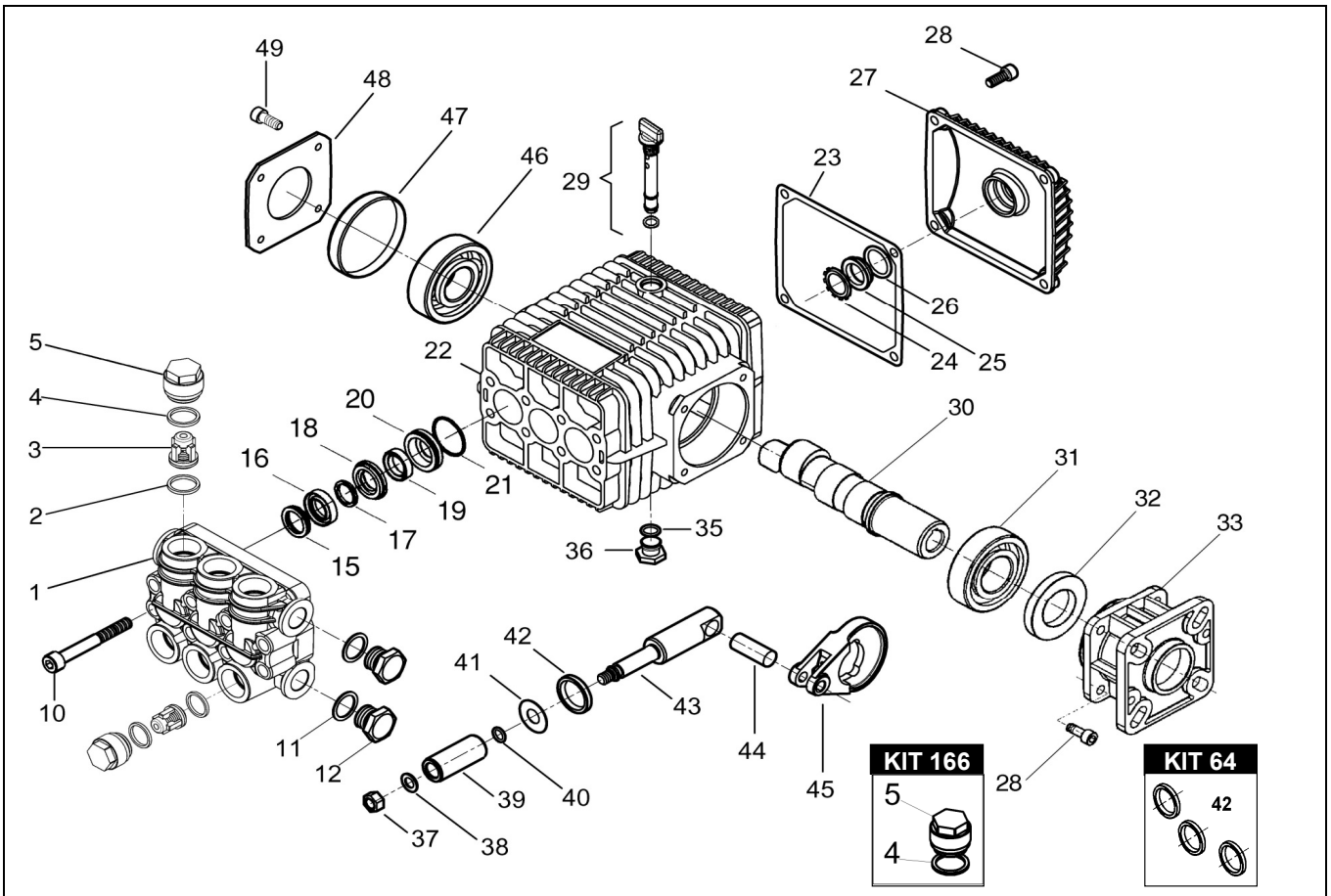

KIT 73

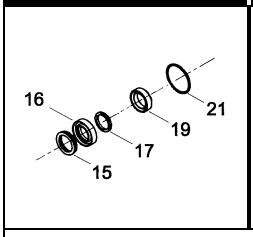

KIT 68

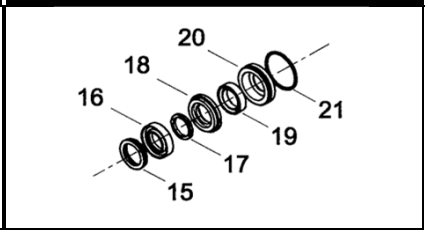

KIT 141

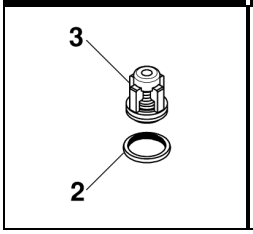

KIT 82

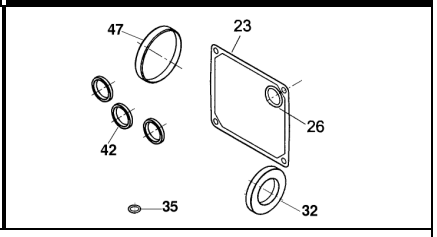

POS.	CODICE PART NO. RÉF.	DENOMINAZIONE - DESCRIPTION - DESCRIPTION	Q.TY
1	020006282	PUMP HEAD (D.15)	1
2-kit 141	803061002	O-RING	6
3-kit 141	019802973	CHECK VALVES	6
4-kit 166	803065002	O-RING	6
5-kit 166	040365282	VALVE CAP	6
10	862900002	BOLT TCEI M8X55 UNI 5931	8
11	824109002	COPPER GASKET DIA.17X22X1	2
12	852579532	PLUG G 3/8 BRASS	2
15-kit 68-73	040270322	THRUST RING	3
16-kit 68-73	802020002	V PACKING D.15	3
17-kit 68-73	040269322	ANTI-EXTRUSION RING	3
18-kit 68	040268532	FRONT GLAND	3
19-kit 68-73	802034002	U PRESSURE SEAL DIA.15X22X5,5	3
20-kit 68	040166532	REAR GLAND	3
21-kit 68-73	803073002	O-RING DIA.23,52X1,78	3
22	040360092	CRANKCASE	1
23-kit 82	050050722	CRANKASE COVER GASKET	1
24	801184002	SNAP RING	1
25	040120322	OIL SIGHT GLASS	1
26-kit 82	803189002	O-RING DIA.2,62X18,72	1
27	040106092	REAR COVER	1
28	862166002	BOLT M6X20	8

POS.	CODICE PART NO. RÉF.	DENOMINAZIONE - DESCRIPTION - DESCRIPTION	Q.TY
29	049832973	OIL FILLER PLUG	1
30	040123262	CRANKSHAFT WBXG 3025	1
31	812725002	BALL BEARING	1
32 Kit 82	802125502	OIL SEAL 30X62X7 (BEFORE 08/23)	1
32 Kit 82	802125602	OIL SEAL 30X62X7 VITON (FROM 09/23)	1
33	040329092	GAS ENGINE FLANGE SAE 3/4	1
35-kit 82	803057002	O-RING	1
36	852543502	CAP G.1/4	1
37	814561002	NUT M8 UNI 5589	3
38	843642902	WASHER DIA.8,1X14X1	3
39	040010182	CERAMIC PISTON DIA.15 MM	3
40	803049002	O-RING DIA.1,78X5,28	3
41	843726002	WASHER DIA.9,1X24X1	3
42-kit 64-82	802035002	OIL SEAL DIA.15X24X5	3
43	040012512	PLUNGER ROD	3
44	852003002	PISTON PIN DIA.8X25	3
45	040116112	CONROD	3
46	812708002	ROLLER BEARING	1
47-kit 82	802099602	CAP	1
48	050045612	COVER	1
49	861955002	BOLT TCEI M6X10 UNI 5931	4

REPAIR KIT		ITEM NO,s INCLUDED	PCS.
kit 64	049836973	KIT RICAMBI	3
kit 68	049840973	KIT RICAMBI	21
kit 73	049843973	KIT RICAMBI	15
kit 82	049846973	SPARE PART KIT	8
kit 141	019826973	KIT RICAMBI	12
kit 166	049960973	KIT RICAMBI	12