WJH-U 110 - 210 - 410 - 710

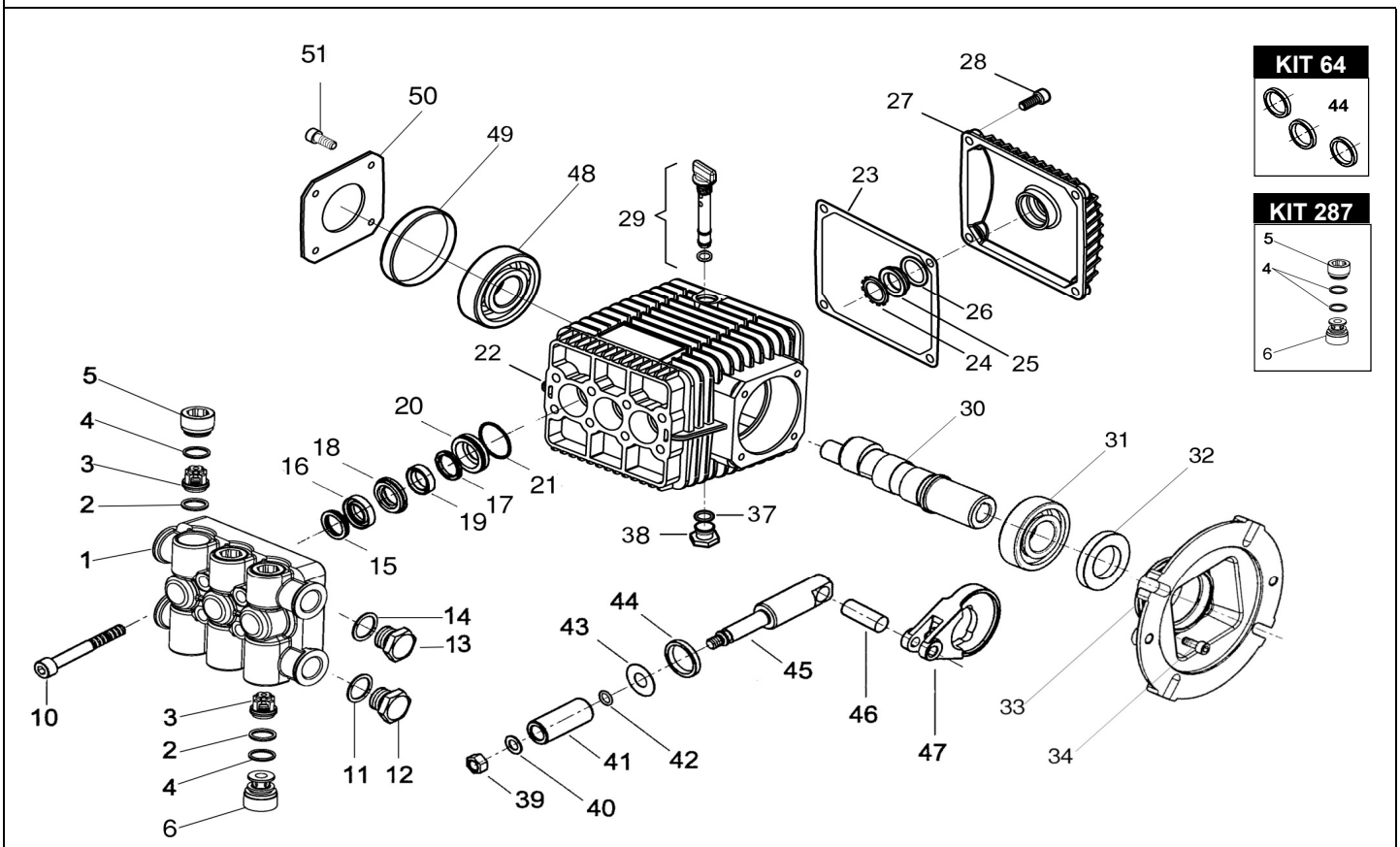

KIT 288

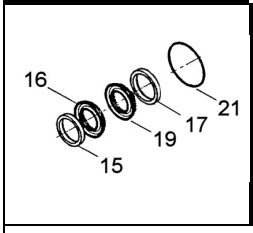

KIT 289

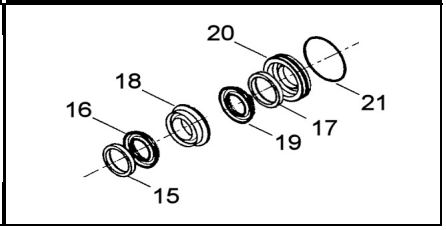

KIT 286

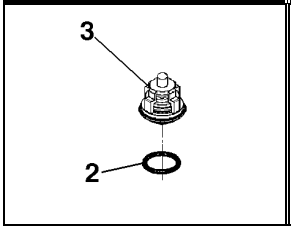

KIT 82

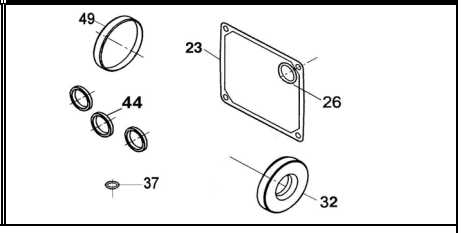

POS.	CODICE PART NO. RÉF.	DENOMINAZIONE - DESCRIPTION - DESCRIPTION	Q.TY
1	020142282	PUMP HEAD (D.15)	1
2-kit 286	803061002	O-RING D.1,78X12,42	6
3-kit 286	029832973	CHECK VALVE	6
4-kit 287	803061002	O-RING 1,78X12,42	6
5-kit 287	010102532	VALVE CAP (DISCHARGE LINE)	3
6-kit 287	020143532	VALVE CAP (SUCTION LINE)	3
10	862892002	SCREW M8X50 UNI 5931	4
11	824109002	COPPER GASKET DIA.17X22X1	1
12	852579532	PLUG G 3/8 BRASS	1
13	852579532	PLUG G 3/8 BRASS	1
14	824109002	COPPER GASKET DIA.17X22X1	1
15-kit 288-289	040270322	SEAL SPACER	3
16-kit 288-289	802020002	V PACKING DIA.15-25	3
17-kit 288-289	020151322	SCRAPER RING	3
18-kit 289	020149532	FRONT GLAND DIA.15 MM	3
19-kit 288-289	802034002	U PRESSURE SEAL DIA.15-22	3
20-kit 289	020150532	BACK GLAND DIA.15 MM	3
21-kit 288-289	803073002	O-RING DIA.1,78X23,52	3
22	040367092	CRANKCASE	1
23-kit 82	050050722	CRANKASE COVER GASKET	1
24	801184002	RING	1
25	040120322	OIL SIGHT GLASS	1
26-kit 82	803189002	O-RING DIA.2,62X18,72	1
27	040106092	REAR COVER	1
28	862166002	SCREW M6X20 UNI5931	4
29	049832973	FILLER PLUG G1/4	1
30/1	040470262	HOLLOW CRANKSHAFT WJH-U 110	1

POS.	CODICE PART NO. RÉF.	DENOMINAZIONE - DESCRIPTION - DESCRIPTION	PCS.
30/2	040471262	HOLLOW CRANKSHAFT WJH-U 210	1
30/3	040127262	HOLLOW CRANKSHAFT WJH-U 410	1
30/4	040142262	HOLLOW CRANKSHAFT WJH-U 710	1
31	812750002	BALL BEARING 30X62X16	1
32-kit 82	802125502	OIL SEAL DIA.30X62X7	1
33	040330092	MOTOR FLANGE	1
34	862168002	SCREW M6X22 UNI5931	4
37-kit 82	803057002	O-RING 1,78X9,25	1
38	852543502	CAP G.1/4 X9	1
39/1	814561002	STAINLESS STEEL NUT M8 (WJH-U 710)	3
39/2	020147512	STAINLESS STEEL NUT M8 (WJH-U 410)	3
39/3	020146512	STAINLESS STEEL NUT M8 (WJH-U 110-210)	3
40	843642902	WASHER DIA.8,1X14X1	3
41	040010182	CERAMIC PISTON DIA.15 MM	3
42	803049002	O-RING DIA.1,78X5,28	3
43	843726002	WASHER DIA.9,1X24X1	3
44-kit 64-82	802035002	OIL SEAL DIA.15X24X5	3
45	040012512	PLUNGER ROD	3
46	852003002	PISTON PIN DIA.8X25	3
47	040115092	CONROD	3
48	812707002	BALL BEARING 25X52X15	1
49-kit 82	802099602	CAP RCA 52-7	1
50	050045612	CRANKCASE COVER	1
51	861955002	SCREW M6X10 UNI 5931	4

REPAIR KIT		ITEM NO,s INCLUDED	PCS.
kit 288	029835973	SPARE PARTS KIT	15
kit 289	029836973	SPARE PARTS KIT	21
kit 286	029833973	SPARE PARTS KIT	12
kit 64	049836973	SPARE PARTS KIT	3
kit 287	029834973	SPARE PARTS KIT	12
kit 82	049846973	SPARE PARTS KIT	8