PRODOTTO/PRODUCT: WJL-U 110-210-410-710

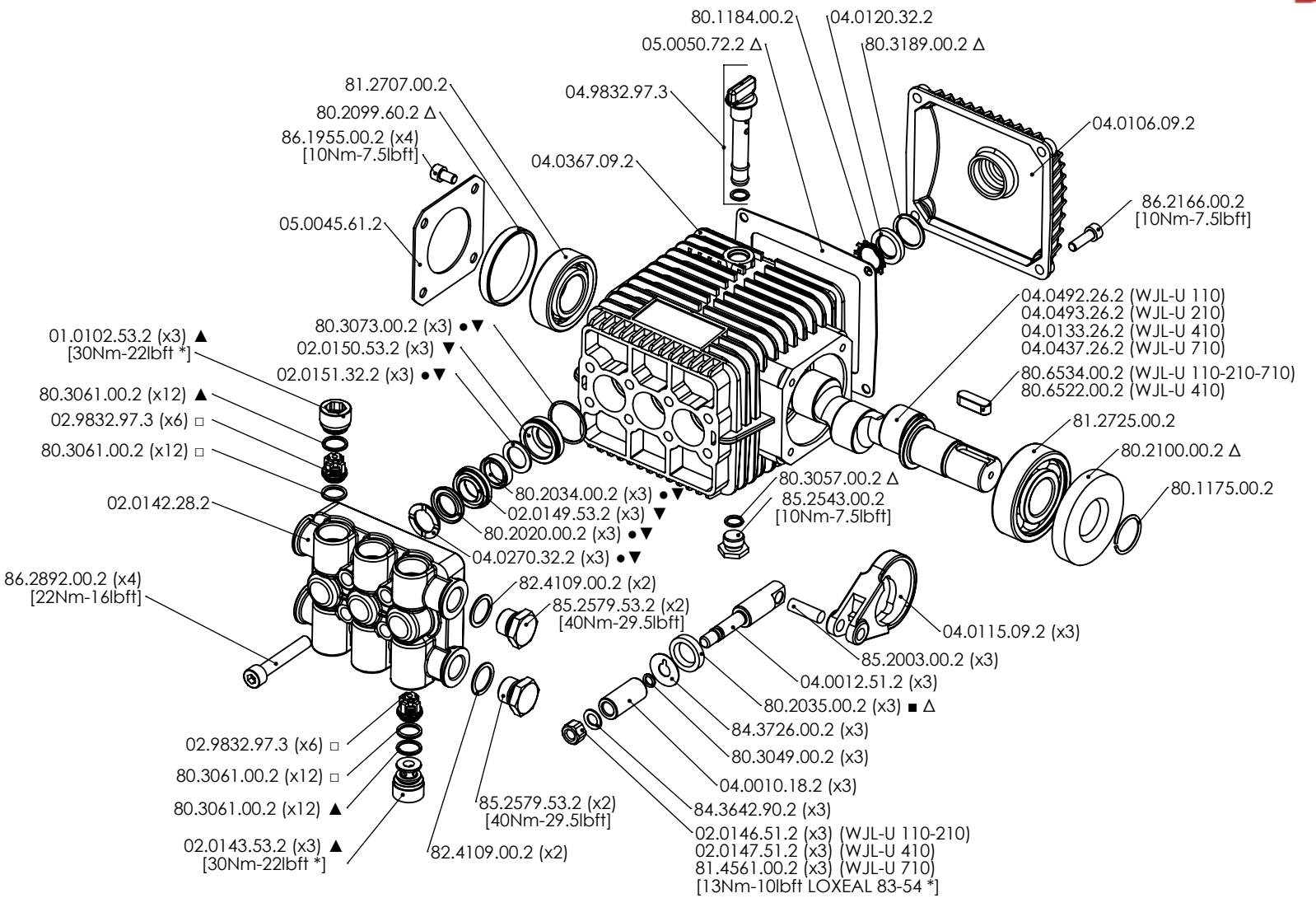

	KIT 64	KIT 287	KIT 288	KIT 289	KIT 286	KIT 83
DENOMINAZIONE - DESCRIPTION	ANELLI RADIALI GUIDE PLUNGER RODS SEALS	TAPPI VALVOLA + OR VALVE CAPS + O-RING	GUARNIZIONI PACKINGS	GUARNIZIONI+LANTERNE PACKINGS+GLANDS	VALVOLE A/M + OR CHECK VALVES + O-RING	TENUTE OLIO OIL SEALS
CODICE - CODE	04.9836.97.3	02.9834.97.3	02.9835.97.3	02.9836.97.3	02.9833.97.3	04.9847.97.3
COMPONENTI - COMPONENTS	■	▲	●	▼	□	Δ
N° PZ- N° PCS	3	12	15	21	12	8

Tolleranza di serraggio / tolerance on torque value
General: 0 /-20% (*): 0/-10%

Data/Date: 28/06/2024 Rev.:00 Note: