WMG-W 4031- 4037- 4043

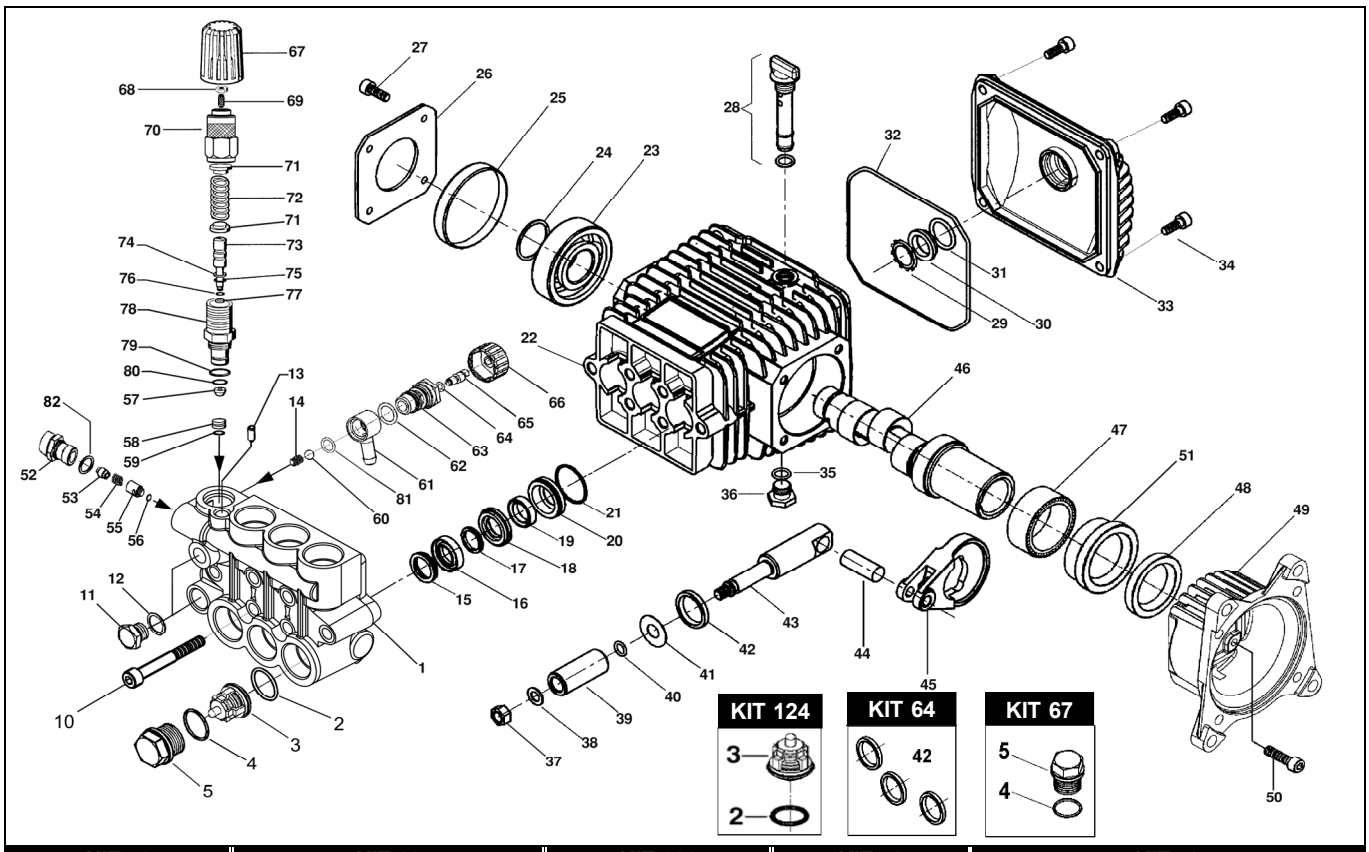

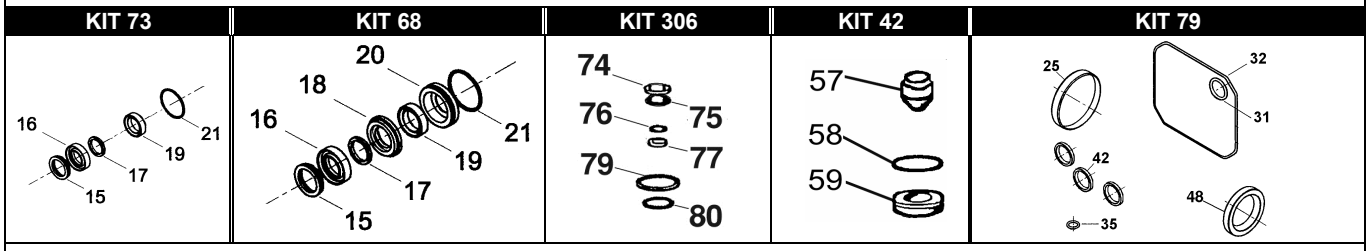

POS.	CODICE PART NO. RÉF.	DENOMINAZIONE - DESCRIPTION - DESCRIPTION	Q.TY
1	040332282	PUMP HEAD	1
2-KIT 124	803182002	O-RING	6
3-kit 124	049887973	CHECK VALVES	6
4-kit 67	803182002	O-RING	6
5	070040532	EX. DEEP SEALING VALVE CAP M27x1,5 (before 10/2020)	6
5-kit 67	070040282	EX. DEEP SEALING VALVE CAP M27x1,5 (from 10/2020)	6
6-KIT 124	040114322	VALVE GUIDE	6
10	862945002	BOLT M8X60 UNI 5931	6
11	852543502	PLUG G 1/4	2
12	824079002	GASKET DIA.13,2x17x1	1
13	863110002	SCREW M10X10	1
14	050290512	SPRING	1
15-kit 68-73	040270322	THRUST RING	3
16-kit 68-73	802020002	"V" PACKING D.15	3
17-kit 68-73	040269322	ANTI-EXTRUSION RING	3
18-kit 73	040268532	FRONT GLAND	3
19-kit 68-73	802034002	U PRESSURE SEAL DIA.15X22X5,5	3
20-kit 68	040166532	BACK GLAND	3
21-kit 68-73	803073002	O-RING DIA.23,52X1,78	3
22	040110092	CRANKCASE	1
23	812725002	BALL BEARING RIV 6B 25	1
24	801185002	SNAP RING	1
25-kit 79	802101002	CAP	1
26	050045612	CRANKCASE COVER	1
27	862108002	BOLT M6X16 UNI 5931	4
28	049832973	OIL FILLER PLUG	1
29	801184002	SNAP RING	1
30	040120322	OIL SIGHT GLASS	1
31-kit 79	803189002	O-RING DIA.2,62X18,72	1
32-kit 79	803210682	O-RING D.2,62X120,32	1
33	040117092	REAR COVER	1
34	862168002	GALVANISED BOLT M6X22 UNI 5931	4
35-kit 79	803057002	O-RING 2037 - 39,34 X 2,62	1
36	852543502	CAP G.1/4 X9	1
37	814561002	NUT	3
38	843642902	WASHER DIA.8,1X14X1	3
39	040010182	CERAMIC PISTON DIA.15 MM.	3
40	803049002	O-RING DIA.1,78X5,28	3
41	843726002	WASHER DIA.9,1X24X1	3
42-kit 64-79	802035002	OIL SEAL DIA.15X24X5	3
43	040107512	PLUNGER ROD	3
44	852003002	PISTON PIN DIA.8X25	3
45	040116112	BRONZE CONROD	3
46/1	040324262	HOLLOW SHAFT WMG-W 4031	1
46/2	040325262	HOLLOW SHAFT WMG-W 4037	1
46/3	040327262	HOLLOW SHAFT WMG-W 4043	1

POS.	CODICE PART NO. RÉF.	DENOMINAZIONE - DESCRIPTION - DESCRIPTION	Q.TY
47	812878902	BUSHING	1
48-kit 79	802188002	OIL SEAL	1
49	070077092	GAS ENGINE FLANGE SAE 1"	1
50	862216002	BOLT M6X25	4
51	040328412	BUSHING	1
52	050307532	NIPPLE G.3/8"	1
53	050288512	NOZZLE D.2,1	1
54	050298512	SPRING	1
55	050297532	CHECK POPPET	1
56	803049502	O-RING	1
57-Kit 42	050110512	POPPET	1
58-Kit 42	050068512	SEAT	1
59-Kit 42	803056002	O-RING	1
60	847413002	BALL	1
61	050277322	DETERGENT CONNECTOR	1
62	803059002	O-RING	2
63	050283532	HOLLOW BOLT	1
64	803040802	O-RING	1
65	050280532	INJECTOR PIN	1
66	050276322	INJECTOR KNOB	1
67	050128322	PRESSURE ADJUSTING KNOB	1
68	814545002	NUT M6	1
69	862140002	SCREW M3X6	1
70	050291532	LOCKING NUT	1
71	050111482	WASHER	2
72	050121492	SPRING	1
73	050099512	PISTON	1
74-Kit 306	050113322	ANTIEXTRUSION RING	2
75-Kit 306	803165502	O-RING	2
76-Kit 306	803050502	O-RING	1
77-Kit 306	050112322	ANTIEXTRUSION RING	1
78	050095532	NIPPLE	1
79-Kit 306	803181202	O-RING	1
80-Kit 306	803175002	O-RING	1
81	803043002	O-RING	1
82	803010002	O-RING	1

REPAIR KIT	ITEM NO,s INCLUDED		PCS.
kit 42	059889973	SPARE PARTS KIT	3
kit 64	049836973	SPARE PARTS KIT	3
kit 67	049839973	SPARE PARTS KIT	12
kit 68	049840973	SPARE PARTS KIT	21
kit 73	049843973	SPARE PARTS KIT	15
kit 79	049842973	SPARE PARTS KIT	8
kit 124	049890973	SPARE PARTS KIT	12
kit 306	049991973	SPARE PARTS KIT	8